Tegometall

The Original for 50 years

Versatility in Storage Technology

ASSEMBLY AND OPERATING INSTRUCTIONS FOR HEAVY-LOAD SHELVING

List of abbreviations used

General abbreviations:

- Fig. – Figure
- i.e. – that is to say (id est)
- ff. – following pages
- Tab. – Table

- DGUV – Deutsche Gesetzliche Unfallversicherung (formerly “Berufsgenossenschaftliche Regeln für Sicherheit und Gesundheit bei der Arbeit – BGR” - German health and safety regulations)
- DIN – Deutsches Institut für Normung
- EN – European standard
- RAL – German Institute for Quality Assurance and Certification

Label:

– The GS marking – “Geprüfte Sicherheit” (tested safety) is a legally regulated test marking for product safety. Issue of the marking is based on the German Product Safety Law (“Produktsicherheitsgesetz” - ProdSG). It came into effect in 2011 and implements the European General Product Safety Directive in German law (2001/95/EC). The label of the material test agency of North Rhine-Westphalia (Dortmund) is shown here.

Product-specific abbreviation:

- SB – Self-service shelving, which is integrated in heavy-load (heavy-duty) shelving.

Dimensions and units:

- H – Height
- L – Length
- T – Depth

- mm – Millimetre
- cm – Centimetre
- m – Metre
- kg – Kilogram
- ° C – Degrees Celsius

Spacial orientation:

- x – Shelving lengthwise direction
- y – Shelving vertical direction
- z – Shelving depth direction

Tegometall
The Original for 50 years

Tegometall International Sales GmbH
Industriestrasse 7
8574 Lengwil
Switzerland

Telephone +41 (0) 71 686 93 00
Fax +41 (0) 71 686 93 10

info@tegometall-sales.com
www.tegometall.com

Dated: March 2019

Please order from a Tegometall ServiceCenter near you.

Drawings and illustrations are without commitment. All rights reserved.
All prices are prices recommended by the manufacturer. VAT and possible customs charges for specific countries, or import taxes and transport are not included.

Our current General Terms of Sale, Delivery and Payment apply with the respective addition.

Colour differences are possible. We reserve the right to make technical changes without notice in the interests of continued development.

Essential components of our product range are legally protected in Germany and abroad.

Copyright © 2019
Tegometall International Sales GmbH (hereafter called Tegometall)
All rights reserved.

All illustrations are the property of Tegometall. All illustrations and descriptions, including all trademarks and symbols, are protected by copyright and other industrial property right laws. Any reproduction, distribution or publication, including on the internet or any other use, is prohibited. The content may not be reproduced, passed on and/or used without the prior written consent of Tegometall.

Tegometall

Contents

1. Introduction 7

1.1 Important ... 7
1.2 Intended use of the heavy-load shelving ... 7
1.3 Notes on accident prevention ... 7
1.4 Standards relevant for these assembly and operating instructions ... 8
1.5 Symbols used in the assembly and operating instructions ... 8
1.6 Liability claim / guarantee ... 8
1.7 Environmental information / disposal ... 8
1.8 Definition of terms ... 9
1.8.1 Shelving bay ... 9
1.8.2 Shelving compartment ... 9
1.8.3 Compartment load ... 9
1.8.4 Bay load ... 9
1.8.5 Heavy-load shelving without and with SB integration ... 9

2. Safety 10

2.1 Safety instructions ... 10
2.1.1 Qualification of the installers ... 10
2.1.2 Installation site ... 10
2.1.3 Evenness and quality of floors ... 10
2.1.4 Maximum deflection of the load-bearing elements ... 10
2.1.5 Deviations of the shelving stands from the vertical ... 11
2.1.6 Maximum load values ... 11
2.1.7 Replace damaged shelving components ... 11
2.1.8 Circulation areas and aisles ... 11
2.1.9 Securing against falling out and falling unit loads and stock ... 12
2.1.10 Push-through guards ... 12
2.1.11 Bumper ... 12
2.1.12 Labelling obligation ... 12
2.1.13 Modification and changes to shelving and shelving components ... 12
2.1.14 Stacking stackable pallets and stackable containers ... 13
2.1.15 Crosswise storage of pallets ... 13
2.1.16 Assembly and operation of the heavy-load shelving abroad ... 13
2.2 Shelving inspection ... 13
2.2.1 Shelving test ... 13
2.2.2 EN 15635 ... 13
2.2.3 Test sequence ... 13
2.2.3.1 Visual checking of the shelf assembly in accordance with the specifications ... 13
2.2.3.2 Visual inspection for compliance with the DGUV standards of the industrial “Berufsgenossenschaften” (agencies responsible for industrial safety in Germany) ... 13
2.2.3.3 Visual inspection from the normal level through intensive visual controls ... 14
2.2.3.4 Visual inspection of shelving components for identifiable deformations and damage in accordance with EN 15635. 14
2.2.3.5 Monitoring criteria ... 14

3. Description of the shelving components 15

3.1 Shelving stands ... 15
3.1.1 Upright cross-sections ... 15
3.1.2 Stand feet ... 15
3.2 Traverses ... 16
3.2.1 Weld-on positions of the traverses on the insert plate ... 16
3.2.2 Traverse cross-sections ... 16
3.2.3 Lift-out preventer ... 17
3.3 Depth connectors ... 17
3.4 Shelves ... 18
3.4.1 Chipboards ... 19
3.4.1.1 Chipboards as shelves positioned on recessed depth connectors ... 19
3.4.2 Shelving elements and fire protection shelving elements ... 19
3.4.2.1 Shelving elements for IT/ITD/ ITG traverses ... 19
3.4.2.2 Shelving elements for ARP traverses ... 19
3.4.2.3 Fire protection shelving elements for ARP traverses ... 20
3.4.2.4 Configuring a shelving area with fire protection / shelving elements ... 20

4. Heavy-Load Shelving Operating Instructions 21

4.1 Operating safety ... 21
4.1.1 Deviations of the shelving stands from the vertical ... 21
4.1.2 Maximum deflection of the load-bearing elements ... 21
4.1.3 Damaged shelving components ... 22
4.1.4 Handling loads and pallets in heavy-load shelving ... 22
4.2 Stacking pallets ... 22
4.2.1 Stacking pallets ... 22
4.2.2 Stacking pallets using industrial trucks ... 23
4.2.3 Crosswise stacking of the pallets ... 23
4.3 Applicability of the guidelines for storage equipment and load carriers ... 23
4.3.1 Circulation areas and aisles ... 23
4.3.2 Securing against falling out and falling unit loads and stock ... 24
4.3.2.1 Tow bow and higher end stands ... 25
4.3.3 Bumper ... 25
4.3.4 Labelling of the heavy-load shelving ... 26

5. Assembly instructions 27

5.1 Installation site ... 27
5.1.1 Floor requirements ... 27
5.1.2 Evenness of floors ... 27
5.2 Shelving assembly ... 27
5.2.1 Deviations of the shelving stands from the vertical and horizontal ... 27
5.2.1.1 Levelling out floor unevenness using sheet metal underlays ... 28
5.2.2 Lift-out preventers ... 28
5.2.3 Fixing the shelving onto the floor ... 28
5.3 Loading capacity ... 29
5.3.1 Permissible load of the depth connectors ... 29
5.3.2 Requirements for IT / ITD / ITG and ARP traverses ... 29
5.3.3 Permissible bay load for heavy-load shelving ... 29
5.3.4 System CG ... 30
5.3.4.1 Permissible traverse load with top and bottom weld-on position ... 30
5.3.4.2 Permissible traverse load with middle weld-on position ... 30
5.3.4.3 Permissible bay load for heavy-load shelving without SB integration ... 30
5.3.4.4 Permissible bay load for heavy-load shelving System CG 55 x 40 with SB integration ... 31
5.3.4.5 Permissible bay load for heavy-load shelving System CG 70 x 80 with SB integration ... 31
5.3.5 System CI ... 32
5.3.5.1 Permissible traverse load of traverses ITDI, ITI and ARPI with middle weld-on position ... 32
5.3.5.2 Permissible traverse load of the traverses ITGI with middle weld-on position ... 32
5.3.5.3 Permissible bay load for industrial shelving System CI 70 x 80 ... 32
5.3.5.4 Permissible bay load for industrial shelving System CI 85 x 80 ... 33
5.3.5.5 Permissible bay load for industrial shelving System CI 100 x 80 ... 33
5.3.6 Permissible load per shelving element ... 34
5.3.7 Permissible load per fire protection shelving element ... 35
5.4 Calculation examples for the permissible compartment and bay loads ... 36
5.4.1 Determination of the permissible compartment and bay loads for System CG 70 x 80 without SB integration in combination with traverse type ITDL 130 x 40 ... 36
5.4.2 Determination of the permissible compartment and bay loads for System CG 70 x 80 with SB integration in combination with traverse type ITDL 130 x 40 ... 37
5.4.3 Determination of permissible bay and compartment loads for system CI 85 x 80 in combination with traverse type ITDI 130 x 40 ... 38

6. Assembly Instructions for the Bolted Stands 39

6.1 Important ... 39
6.1.1 Scope of these assembly instructions ... 39
6.1.2 Safety instructions ... 39
6.1.3 Bolting instructions ... 39
6.2 Installing the bolted stands without special equipment ... 40
6.2.1 Positioning the stand profiles ... 40
6.2.2 Installing the horizontal struts ... 40
6.2.2.1 Installing the horizontal struts – System CG 55 x 40 ... 41
6.2.2.2 Installing the horizontal struts – System CG / CI 70 x 80 ... 42
6.2.3 Installing the diagonal struts – System CG 55 x 40 and System CG / CI 70 x 80 ... 43
6.2.3.1 Installing the diagonal struts – System CG 55 x 40 ... 43
6.2.3.2 Installing the diagonal struts – System CG / CI 70 x 80 ... 44

6.2.4 System CI 85 x 80 and System CI 100 x 80 – installing horizontal and diagonal struts 44
6.2.5 Installing the stand feet 46
6.2.5.1 Installing the stand feet – System CG 55 x 40 46
6.2.5.2 Installing the stand feet – System CG / CI 70 x 80 46
6.2.5.3 Installing the stand feet – System CI 85 x 80 and CI 100 x 80 47
6.3 Bolted stands parts list, System CG 55 x 40 48
6.3.1 System CG 55 x 40 – Standard range 48
6.3.2 System CG 55 x 40 – Special range 49
6.4 Bolted stands parts list, System CG 70 x 80 50
6.4.1 System CG 70 x 80 – Standard range 50
6.4.2 System CG 70 x 80 – Special range 51
6.5 Bolted stands parts list, System CI 70 x 80 52
6.5.1 System CI 70 x 80 – Standard range 52
6.6 Bolted stands parts list, System CI 85 x 80 54
6.6.1 System CI 85 x 80 – Standard range 54
6.7 Bolted stands parts list, System CI 100 x 80 56
6.7.1 System CI 100 x 80 – Standard range 56

Chapter 1

Introduction

READ THE ASSEMBLY AND OPERATING INSTRUCTIONS

Before starting any work with or on heavy-load shelving, these assembly and operating instructions must be read through carefully, including the safety instructions and hazard information, and must be complied with at all times.

Keep these assembly and operating instructions near the heavy-load shelving at all times.

1.1 Important

- The general principles and guidelines for the installation and operation of storage equipment must always be followed. If these regulations are not available they must be requested.
- The requirements and instructions given in these assembly and operating instructions must be implemented during the assembly, installation, putting into service and use of the heavy-load shelving. If you have any questions or require technical support, please contact Tegometall International Sales GmbH.
- Please note! The illustration of the shelving and shelving parts in these instructions can differ from the shelving delivered as a result of technical advances. This does not effect the contents and importance of these assembly and operating instructions; the assembly and operating instructions must always be followed.

1.2 Intended use of the heavy-load shelving

- The requirements and load values described in these assembly and operating instructions apply only to shelving equipment which is installed in rooms enclosed on all sides and which are temperature controlled (> 5° C). The load limits are given in these assembly and operating instructions. The manufacturer must always be consulted before installing shelving equipment which is subject to different external conditions.
- Zinc plated shelves or traverses are not suitable for direct storage of food.

1.3 Notes on accident prevention

Always note and comply with the following during assembly and use of the heavy-load shelving:

- The general accident prevention regulations, especially the “Storage equipment and load carriers” guidelines, the health and safety at work rules of the German agencies responsible for industrial safety (“Berufsgenossenschaften”) – DGUV-Regelwerk 108-007 (formerly BGR 234), each in their respective current version, must basically be fulfilled. Alternatively, the comparable legal provisions of the respective country in which the assembly or installation is carried out apply.
- All safety instructions in Chapter 2 must be read and followed.
- The shelving systems must only be used for the described intended purpose.
- The shelving systems may not be climbed.
- The technical rules, especially the manufacturer’s guidelines in these assembly and operating instructions, must be complied with at all times.
- The shelving should only be planned and accepted by persons who have taken part in heavy-load training given by Tegometall International Sales GmbH.
- We do not accept any liability whatsoever for independent, unauthorised installation or modification. In these cases the owner / operating company acts at their own risk and is therefore responsible for any damage that occurs.
- We do not accept any liability whatsoever if the shelving is planned and accepted by persons who have not attended our heavy-load training, and / or the shelving is installed or modified improperly or if unapproved bolts, nuts and dowels / anchors are used. In these cases the owner / operating company acts at their own risk and is therefore responsible for any damage that occurs.
- Liability of the manufacturer is excluded if safety instructions and / or the respective legal regulations are not followed.

1.4 Standards relevant for these assembly and operating instructions

DIN, EN and other regulations apply each in their respective current version:

- The German accident agency health and safety at work rules (“Berufsgenossenschaftliche Regeln für Sicherheit und Gesundheit bei der Arbeit gemäß DGUV-Regelwerk 108-007”) (formerly BGR 234 “Storage equipment and load carriers”)
- German regulations on health & safety when using work equipment (“Verordnung über Sicherheit und Gesundheitsschutz bei der Verwendung von Arbeitsmitteln” (health and safety regulations - (“Betriebssicherheitsverordnung” - BetrSichV)
- Relevant accident prevention regulations
- Generally recognised safety rules
- The guidelines for storage equipment and load carriers of the respective country must be followed when planning or designing shelving equipment.
- EN 15512 “Steel static storage systems. Adjustable pallet racking systems. Principles for structural design”
- EN 15620 “Steel static storage systems. Adjustable pallet racking. Tolerances, deformations and clearances”
- EN 15629 “Steel static storage systems. Specification of storage equipment”
- EN 15635 “Steel static storage systems. Application and maintenance of storage equipment”
- RAL-RG 614 “Gütesicherung für Lager- und Betriebseinrichtungen” (Storage and operating equipment - Quality assurance)
- DIN 18202 “Toleranzen im Hochbau - Bauwerke” (Tolerances in building construction - Buildings)
- ETAG No. 001 “European Technical Approval Guidelines”

1.5 Symbols used in the assembly and operating instructions

DANGER
“DANGER” indicates an imminent hazard, which will result in immediate death or severe physical injury.
➔ This arrow indicates the appropriate measures to avert the imminent hazard.

WARNING
“WARNING” indicates an imminent hazard, which can possibly result in death or severe physical injury.
➔ This arrow indicates the appropriate measures to avert the imminent hazard.

CAUTION
“CAUTION” indicates an imminent hazard, which can result in minor or moderate physical injuries.
➔ This arrow indicates the appropriate measures to avert the imminent hazard.

NOTE
“NOTE” indicates possible damage to property, gives use recommendations and helpful tips.

REGULATION
“REGULATION” indicates a legal regulation, directive or guidelines. If this regulation is not complied with, this will result in the exclusion of the liability of Tegometall International Sales GmbH.

1.6 Liability claim / guarantee

- Liability of the manufacturer is excluded if safety instructions and / or the respective legal regulations are not followed.

1.7 Environmental information / disposal

- Old and defective components and the packaging materials can be sorted into their separate materials, so that if necessary they can be disposed of in an environmentally friendly way or their material can be recovered or reused.

1.8 Definition of terms

1.8.1 Shelving bay

Shelving can consist of one or several shelving bays. Two stands together form a shelving bay.

1.8.2 Shelving compartment

A shelving bay in turn is made up of several shelving compartments. A pair of traverses forms a shelving compartment.

1.8.3 Compartment load

The compartment load is the load which can be placed in a compartment from one side of the shelving, whereby uniformly distributed load is assumed.

1.8.4 Bay load

The bay load is the sum of the compartment loads in a bay, whereby a uniformly distributed load is assumed.

The bay load in the example shown is calculated as follows: **Bay load = Compartment load 1 + Compartment load 2 + Compartment load 3**, i.e. the bay load is 3000 kg.

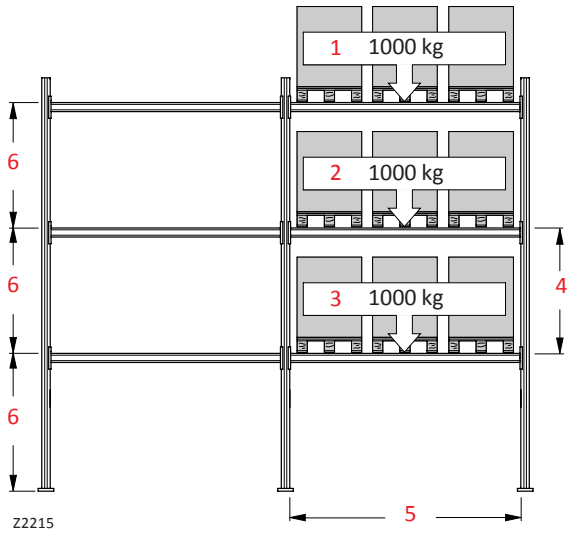

1	Compartment load 1	4	Shelving compartment
2	Compartment load 2	5	Shelving bay
3	Compartment load 3	6	Compartment height

Fig. 1 Shelving with two shelving bays and three shelves or shelving compartments per bay

1.8.5 Heavy-load shelving without and with SB integration

Heavy-load shelving with SB integration is the term used to describe shelving in which a sales shelf (SB shelving) is integrated in the bottom area.

This shelving type must be considered separately when determining the permissible loads (see Chapter 5 Assembly Instructions, page 29 ff.).

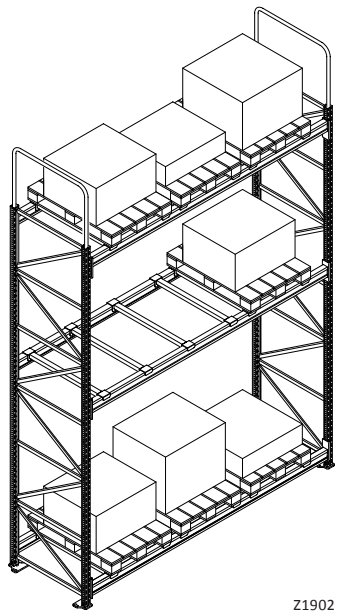

Fig. 2 Shelving without SB integration

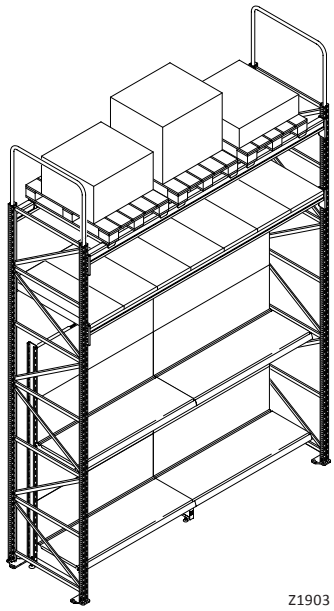

Fig. 3 Shelving with SB integration

Chapter 2

Safety

2.1 Safety instructions

DANGER
Read all safety information and instructions.
Failure to comply with the safety information and instructions can result in immediate death or severe physical injury.
Keep all safety information and instructions for future use.

2.1.1 Qualification of the installers

- Shelving may only be installed and modified in compliance with the Assembly and Operating Instructions supplied with the product by the manufacturer and only by persons who have received particular instruction on how to do so.

2.1.2 Installation site

- The shelving is self-supporting, i.e. there is no need to transfer loads into the building walls or ceilings.

2.1.3 Evenness and quality of floors

- The evenness of the floor must be ensured for RFZ installations according to FEM 9.831 or for conventional shelving systems, drive-through racking systems, etc. according to DIN 18202. Please note minimum concrete grade C 20/25 (containing no magnesite) with appropriate reinforcement.
- The floor slab must absorb the compressive, tensile and shear forces from the shelving.
- Minimum thickness of the floor slab 200 mm and minimum drillhole depth 150 mm, provided the loads and / or the anchorings do not require large thicknesses and depths.
- Any earthquake loads and possibly required fire safety precautions are not taken into account. The building regulations must be checked by the customer or owner / operating company.

§ **REGULATION**
DIN 18202 “Tolerances in building construction - Buildings”.

2.1.4 Maximum deflection of the load-bearing elements

- The maximum deflection of the load-bearing elements (traverses), when the nominal load (max. perm. load) is applied, may not exceed 1 / 200 of the traverse length (see page 21, Fig. 25).

§ **REGULATION**
EN 15620 “Steel static storage systems - Adjustable pallet racking systems - tolerances, deformations and clearances”.

§ **REGULATION**
EN 15635 “Steel static storage systems - Application and maintenance of storage equipment”.

2.1.5 Deviations of the shelving stands from the vertical

- During operation of the shelving, ensure that the shelving stands are plumb (in a vertical position). Deviations of the shelving stands from the vertical, in lengthwise or depth direction of the shelving, must not exceed 1 / 200 of the shelving stand height (see page 21, Fig. 24).

§ **REGULATION**
EN 15620 “Steel static storage systems - Adjustable pallet racking systems - tolerances, deformations and clearances”.

§ **REGULATION**
EN 15635 “Steel static storage systems - Application and maintenance of storage equipment”.

2.1.6 Maximum load values

- The permissible load of storage equipment and load carriers must not be exceeded or their stability impaired.
- Unit loads must not be put down with a jolt or jerk. The load information must be attached to the shelving so that it is clearly recognisable and permanent (see “chapter 4.3.4 Labelling of the heavy-load shelving“, page 26).
- The tables (page 29 ff.) give the loads for the usual compartment heights and axis spacings. In case of different dimensions, always consult Tegometall International Sales GmbH.

2.1.7 Replace damaged shelving components

- Damaged shelving components no longer ensure the necessary stability and loading capacity. They can buckle or break and thus result in accidents. If a shelving component is visibly damaged, any load on it must be removed from it and it must be replaced (see “chapter 2.2 Shelving inspection“, page 13).

2.1.8 Circulation areas and aisles

- Storage equipment and load carriers must be set up and installed so that adequately dimensioned aisles are available. Circulation areas for pedestrians between storage equipment must be at least 1.25 m wide. Aisles, which are only intended for loading and unloading by hand (side aisles), must be at least 0.75 m wide.
- Circulation areas for power driven or rail-bound handling equipment must be wide enough to ensure a safety distance of at least 0.5 m on both sides of the handling equipment. The space required for manoeuvring movements must also be taken into account in the dimensioning.
- Passages in shelving must have a minimum clear height of 2 m. The clear height of drive-through passages must be dimensioned depending on the respective conveying equipment used.

§ **REGULATION**
DGUV Rule 108-007 – Storage equipment and load carriers.

2.1.9 Securing against falling out and falling unit loads and stock

- Components of shelving and cabinets must be designed or secured so that they cannot fall out or fall due to accidental loosening or unfastening.
- The sides of shelving not intended for loading and unloading must be secured to prevent unit loads from falling. The dimensioning of the safeguards must correspond to the dimensions and loads of the unit loads.
- For pallet storage the safeguards against falling unit loads must also be at least 500 mm high at the top shelves and compartments too.
- The areas above shelving passageways must be safely designed to prevent falling unit loads and falling through of stock.

§ **REGULATION**
DGUV Rule 108-007 – Storage equipment and load carriers.

2.1.10 Push-through guards

- Double shelving, which is loaded from two sides by non-line-guided conveying equipment, must have push-through guards, if the safety distance of at least 100 mm between the pallets is not complied with. The push-through guards must be effective up to a height of at least 150 mm (see page 25, Fig. 32).

§ **REGULATION**
DGUV Rule 108-007 – Storage equipment and load carriers.

2.1.11 Bumper

- To secure the corner areas and passages, a yellow-black marked bumper at least 400 mm high is required.

§ **REGULATION**
DGUV Rule 108-007 – Storage equipment and load carriers.

2.1.12 Labelling obligation

- The load sign shown in Fig. 38 (see page 26) must be permanently attached in a clearly identifiable position on fixed shelving with a compartment load of more than 200 kg or a bay load of more than 1000 kg.
- The load signs and labels for permissible loads must always be attached whenever the shelving is assembled or modified.

§ **REGULATION**
DGUV Rule 108-007 – Storage equipment and load carriers.

2.1.13 Modification and changes to shelving and shelving components

- Shelving may only be installed and modified in compliance with the Assembly and Operating Instructions supplied with the product by the manufacturer and only by persons who have received particular instruction on how to do so.
- Shelving must only be modified when it is unloaded.
- Technical changes and welding work on the stands and traverses are not permitted.
- The manufacturer must always be contacted if there are any questions or uncertainties. The load values must be recalculated. The shelving equipment must not be loaded until all assembly and installation work has been completed. The accident prevention regulations must always be followed during any installation and dismantling work.

2.1.14 Stacking stackable pallets and stackable containers

- Stackable pallets and containers must only be picked up and stacked using suitable load handling devices. This is ensured, e.g. by using forks, which correspond to the dimensions of the unit loads to be stacked and which are neither too long nor too short.

§ **REGULATION**
DGUV Rule 108-007 – Storage equipment and load carriers.

2.1.15 Crosswise storage of pallets

- Depth connectors must always be provided for crosswise stacking. The number of depth connectors per pallet place results from the weight of the pallet to be placed in storage

(see “chapter 5.3.1 Permissible load of the depth connectors“, page 29).

2.1.16 Assembly and operation of the heavy-load shelving abroad

- The relevant laws, guidelines, directives and regulations of the respective country apply to the installation and operation of heavy-load shelving abroad.

2.2 Shelving inspection

2.2.1 Shelving test

According to the German Federal Ministry of Labour and Social Affairs, shelving is work equipment and is thus subject to the health and safety at work regulations (BetrSichV). This applies to the provision of shelving by the employer and to the use of shelving by employees. Therefore, according to § 3 BetrSichV the employer must also draw up (or have drawn up) a hazard assessment for shelving installations and according to § 10 must have the installations checked by a competent person at the defined intervals.

Previously checking was required by the DGUV standard 108-007 (formerly BGR 234 “Storage equipment and load carriers”). Under these regulations the employer must ensure that power operated shelving and cabinets and shelving and cabinets with power operated internal equipment must be tested or inspected for safe condition by a competent person as required, however at least once a year. Records are to be kept of the test and inspection results.

2.2.2 EN 15635

EN 15635 (Steel static storage systems, Application and maintenance of storage equipment) differentiates here between the weekly inspection to be performed and the so-called expert inspection, which must be carried out by a competent person at maximum intervals of 12 months. While the weekly inspection can be carried out by the company itself, provided suitable personnel is available, special technical knowledge is required for the expert inspections.

2.2.3 Test sequence

The inspections of a shelving system can / are carried out during on-going operations. The checking includes the following:

2.2.3.1 Visual checking of the shelf assembly in accordance with the specifications

- Random checks are made to ensure that the load limits are not exceeded.

2.2.3.2 Visual inspection for compliance with the DGUV standards of the industrial “Berufsgenossenschaften” (agencies responsible for industrial safety in Germany)

- This involves checking whether all necessary safety equipment and devices are present and functional.

2.2.3.3 Visual inspection from the normal level through intensive visual controls

- These involve (including in the top area) checking whether stands, supports and traverses show any signs of damage.

2.2.3.4 Visual inspection of shelving components for identifiable deformations and damage in accordance with EN 15635

- Local measuring of the shelving for vertical and straight position (shelving that is not plumb have substantial load capacity loss).

2.2.3.5 Monitoring criteria

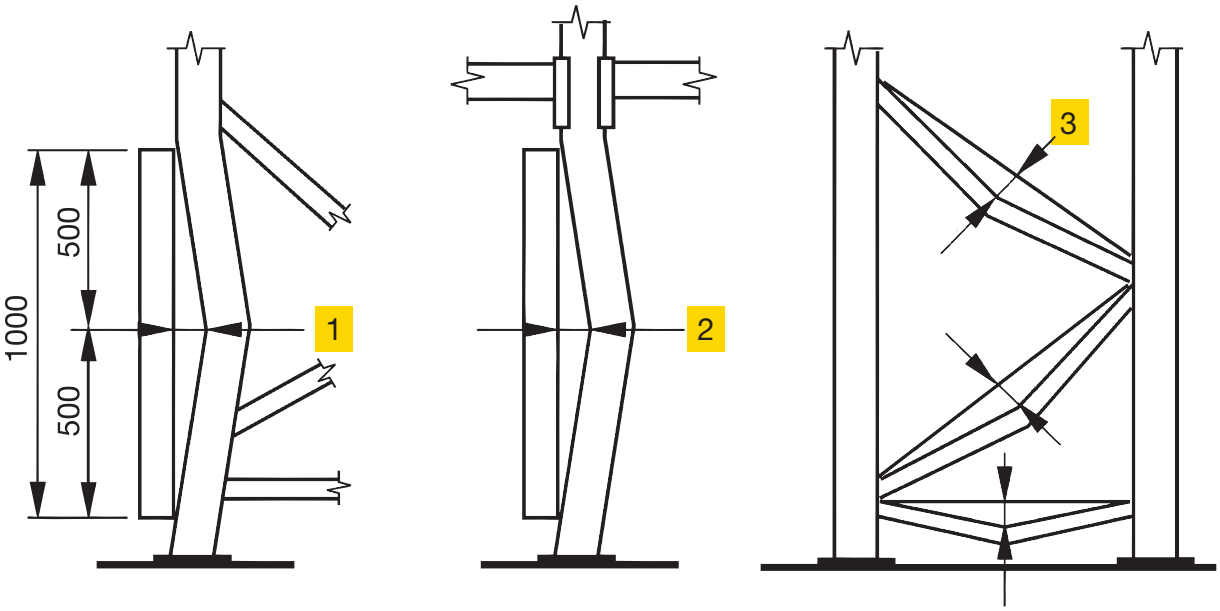

Fig. 4 Maximum permissible deformation in accordance with EN 15635

GREEN Monitoring	1 ≤ 3 mm 2 ≤ 5 mm 3 ≤ 10 mm	The green danger level means that the damage does not reduce the load-bearing capacity and does not require immediate repair of the system. Such components must be recorded as being suitable for further use until the next company inspection and must be clearly marked for special, renewed checking and evaluation during future inspections.
ORANGE Soonest possible action required	1 < 6 mm 2 < 10 mm 3 < 20 mm	In the case of the orange danger level the damage is so severe that it must be repaired, however, it is not so serious that immediate unloading of the shelving is required. After unloading, the component must not be loaded again until the repair has been carried out. The user must ensure a suitable method of closing off to prevent use. After 4 weeks without repair, these components are re-classified as red danger level.
RED Immediate action required	1 ≥ 6 mm 2 ≥ 10 mm 3 ≥ 20 mm	The red danger level is critical. The damage requires that a zone of the shelving be unloaded immediately and be made inaccessible for further use until repair work has been carried out. Repair is only permitted if it is accompanied by a structural analysis by the supplier. The user must ensure a suitable method of closing off to prevent use.

Description of the shelving components

3.1 Shelving stands

The shelving stands stiffen the shelving in the depth direction and transfer the compartment loads into the floor. The stands are made up of two supports. The supports are stiffened against each other by bolted on horizontal and diagonal bars.

The supports are made of a perforated C-profile. The perforations are matched to the geometry of the hook-shaped insert plate and ensure secure fit of the insert plate and thus of the traverse.

3.1.1 Upright cross-sections

CG 55 x 40

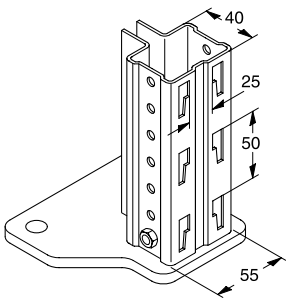

CG 70 x 80

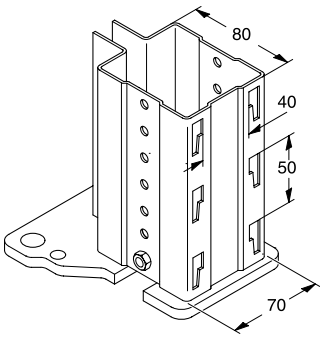

CI 70 x 80

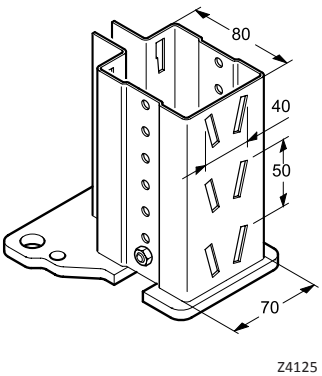

CI 85 x 80

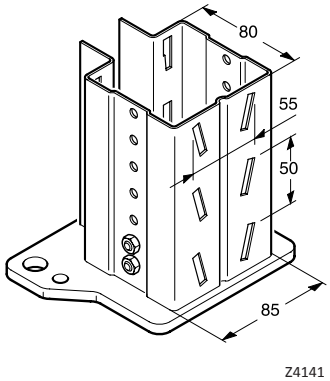

CI 100 x 80

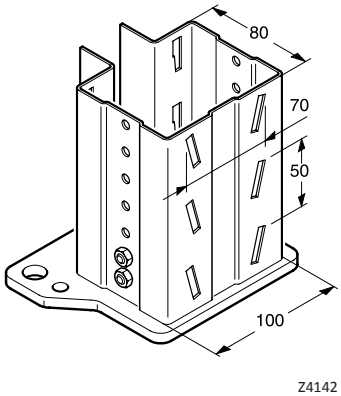

Fig. 5 Upright cross-sections of the support profiles (all dimensions in mm)

3.1.2 Stand feet

CG 55 x 40

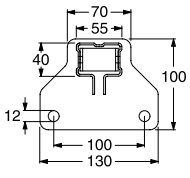

CG / CI 70 x 80

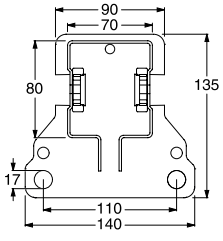

CI 85 x 80

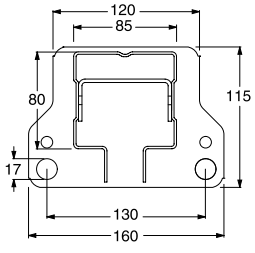

CI 100 x 80

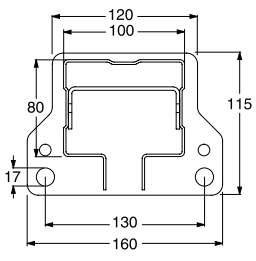

Fig. 6 Stand feet of the support profiles (all dimensions in mm)

3.2 Traverses

The hooked in traverses stiffen the shelving in the lengthwise direction and transfer the compartment loads into the stands.
A transverse consists of a profiled metal sheet, at the ends of which an insert plate with five or four hooks is welded on. The traverses are differentiated between, according to the position of the welded on insert plate, as “Traverse top”, “Traverse middle” and “Traverse bottom”.

3.2.1 Weld-on positions of the traverses on the insert plate

Traverse welded onto the top of the insert plate.

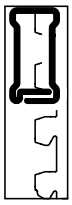

Z4060

Traverse welded onto the middle of the insert plate.

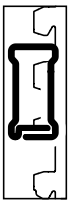

Z4061

Traverse welded onto the bottom of the insert plate.

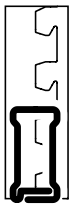

Z4059

Fig. 7 The three possible positions for welding the traverses onto the insert plates

The “Traverse top” can be hooked into the top compartment position as an “end traverse”.

The “Traverse bottom” can be used to achieve a smaller distance between the bottom shelving compartment and the floor.

3.2.2 Traverse cross-sections

ITD 80 x 40

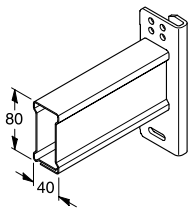

Z4131

ITD 100 x 40

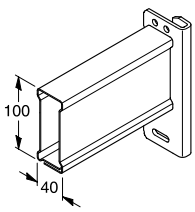

Z4132

ITD 120 x 40

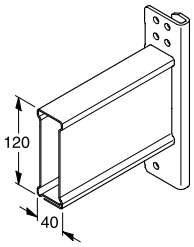

Z4133

ITD 130 x 40

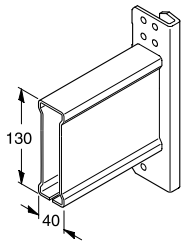

Z4134

IT 140 x 40

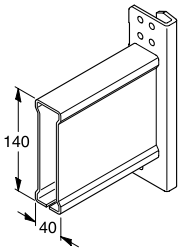

Z4136

Fig. 8 Traverse cross-sections of the ITDL / IT traverses (all dimensions in mm, the middle weld-on position is shown)

ITG 80 x 50

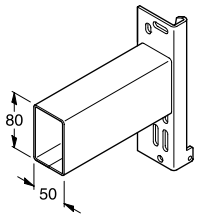

Z4135

ITG 100 x 50

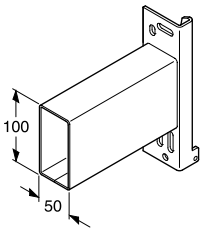

Z3576

ITG 120 x 50

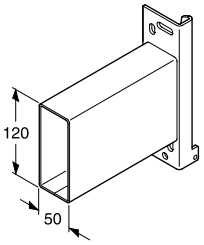

Z3577

ITG 130 x 50

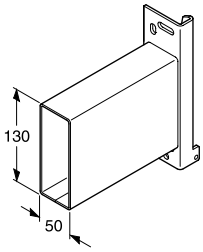

Z3578

ITG 140 x 50

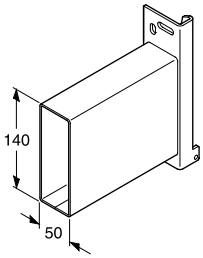

Z3579

ITG 150 x 50

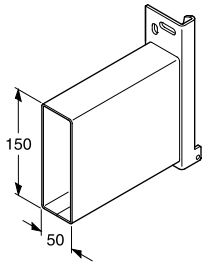

Z3580

Fig. 9 Traverse cross-sections of the ITG traverses (all dimensions in mm, the middle weld-on position is shown)

ARP 60 x 40

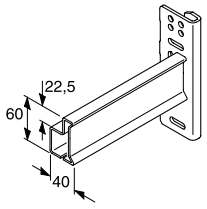

Z4127

ARP 80 x 40

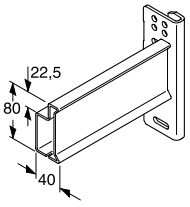

Z4128

ARP 100 x 40

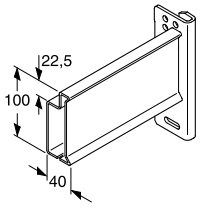

Z4129

ARP 120 x 40

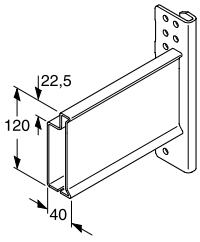

Z4130

Fig. 10 Traverse cross-sections of the ARP traverses (all dimensions in mm, the middle weld-on position is shown)

3.2.3 Lift-out preventer

The lift-out preventer is a part which is especially matched to the hook and system hole geometry. It prevents accidental unhooking of the traverse.

DANGER
Risk to life due to falling traverses and/or falling stock as a result of unhooked traverses.
➔ Two lift-out preventers must be inserted for each traverse, i.e. one lift-out preventer must be used for each insert plate.

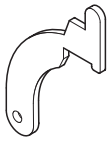

Z1917

Fig. 11 System CG lift-out preventer

Z4155

Fig. 12 System CI lift-out preventer

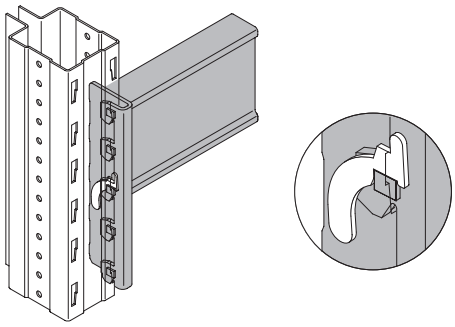

Z1918

Fig. 13 Inserting the System CG lift-out preventer

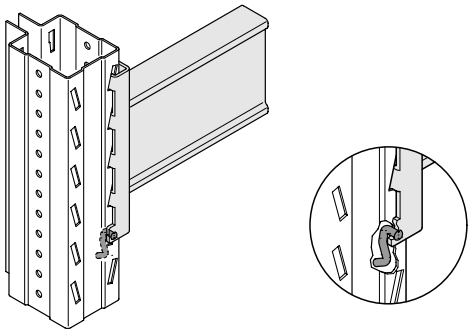

Z4156

Fig. 14 Inserting the System CI lift-out preventer

3.3 Depth connectors

The depth connectors are pure support carriers, which are hooked in crosswise to the IT and ITG pair of traverses. Depth connectors must be used for crosswise stacking of Euro pallets and for inserting panels and boards, e.g. chipboards as shelf.

There are two depth connector variants depending on the intended use:

- Depth connector for pallet storage
- Recessed depth connector for inserting chipboards as shelves

DANGER
Risk to life due to falling stock as a result of insufficient number of hooked in depth connectors.
➔ Hook in an adequate number of depth connectors, depending on the weight and shape of the stock (see Tab. 3, page 29).

NOTE
The depth connectors are designed for the respective shelving system and a traverse width and may only be used so.
➔ The depth connectors are to be secured against slipping in a suitable manner (gluing or screwing).

Depth connector

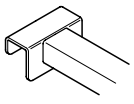

Z2185

Depth connector recessed

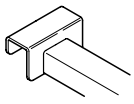

Z2186

FO depth connector

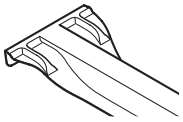

Z4159

FO depth connector recessed

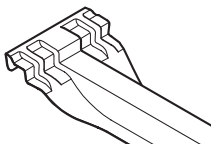

Z4160

Fig. 15 Depth connectors

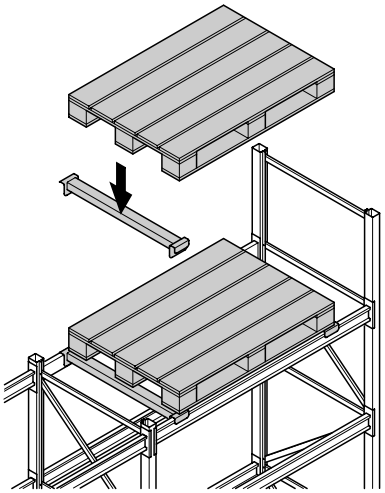

Z2189

Fig. 16 Depth connector for the storage of pallets (here: pallet stacked cross-wise)

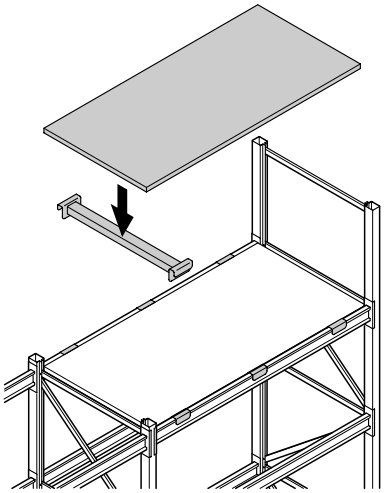

Z2188

Fig. 17 Recessed depth connector for flat insertion of chipboards as shelves

3.4 Shelves

The following shelves can be used in the shelving systems:

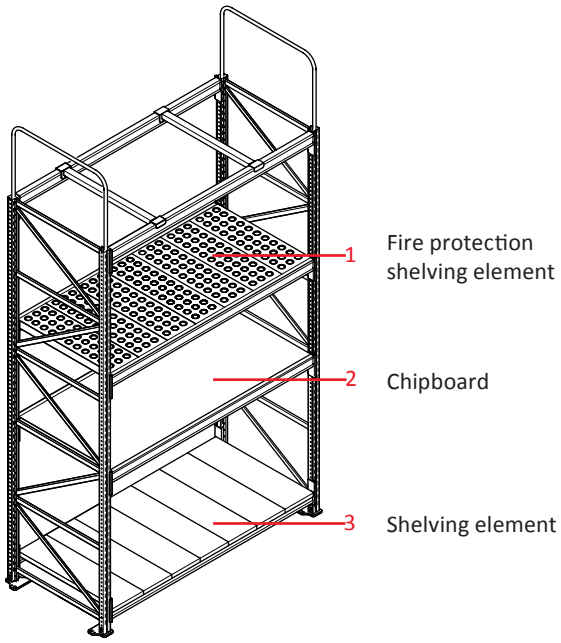

Z1923

Fig. 18 Heavy-load shelving fitted with different shelves

3.4.1 Chipboards

3.4.1.1 Chipboards as shelves positioned on recessed depth connectors

Chipboards (19 mm or 22 mm thick) can be used as shelves with appropriate recessed depth connectors in combination with traverses.

DANGER
Risk to life due to falling stock as a result of insufficient loading capacity of the chipboards.
➔ The loading capacity details for the respective chipboards must be requested from the manufacturer or supplier of the chipboards and must be complied with.

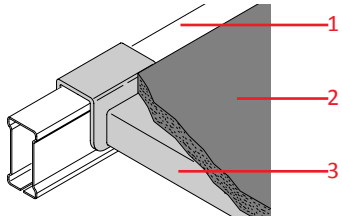

Fig. 19 Chipboard as shelf positioned on recessed depth connector

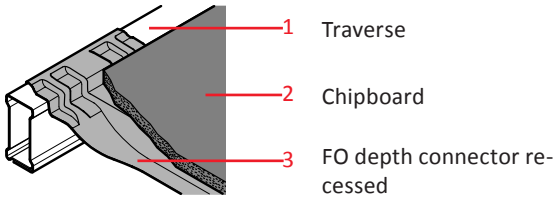

Fig. 20 Chipboard as shelf positioned on recessed FO depth connector

3.4.2 Shelving elements and fire protection shelving elements

DANGER
Risk to life due to falling stock as a result of insufficient loading capacity of the shelving elements or fire protection shelving elements.
➔ The permissible load per shelving element or fire protection shelving element must be observed. Details of the loading capacity of the shelving elements and fire protection shelving elements are given in page 34 and page 35.

3.4.2.1 Shelving elements for IT /ITD/ ITG traverses

The shelving elements are available in widths 18.7 cm and 22.6 cm and can be positioned on the IT / ITD/ITG traverses.

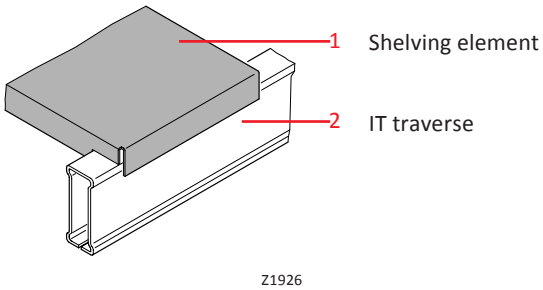

Fig. 21 IT traverse with shelving elements

3.4.2.2 Shelving elements for ARP traverses

The shelving elements are available in widths 18.7 cm and 22.6 cm and can be positioned on the ARP traverses.

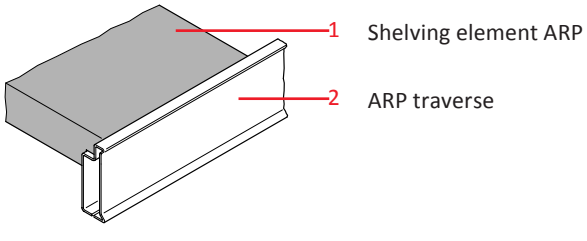

Fig. 22 ARP traverse with inserted shelving element ARP

3.4.2.3 Fire protection shelving elements for ARP traverses

The fire protection shelving elements are available in widths 18.7 cm and 22.6 cm and can be positioned on the ARP traverses.

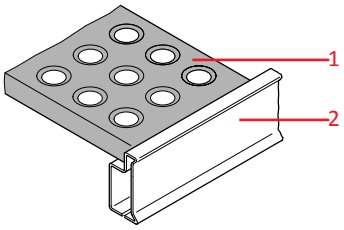

1 Fire protection shelving element ARP

2 ARP traverse

Z2195

Fig. 23 ARP traverse with inserted fire protection shelving element ARP

3.4.2.4 Configuring a shelving area with fire protection / shelving elements

Combinations recommended for configuring a shelving area with shelves:

Axis spacing L in cm	Number of shelves	
	Width 18.7 cm	Width 22.6 cm
125	4	2
133	2	4
193	4	5
200	8	2
250	1	10
266	14	0
273	1	11
300	0	13

Tab. 1 Recommended combinations

Heavy-Load Shelving Operating Instructions

4.1 Operating safety

4.1.1 Deviations of the shelving stands from the vertical

During operation of the shelving, ensure that the shelving stands are plumb (in a vertical position). Deviations of the shelving stands from the vertical, in lengthwise (x) or depth direction (z) of the shelving, must not exceed 1 / 200 of the shelving stand height.

DANGER
Risk to life due to shelving collapse as a result of poor structural calculations.
➔ The maximum deviations of the shelving stands from the vertical, in lengthwise and / or depth direction must not be exceeded.

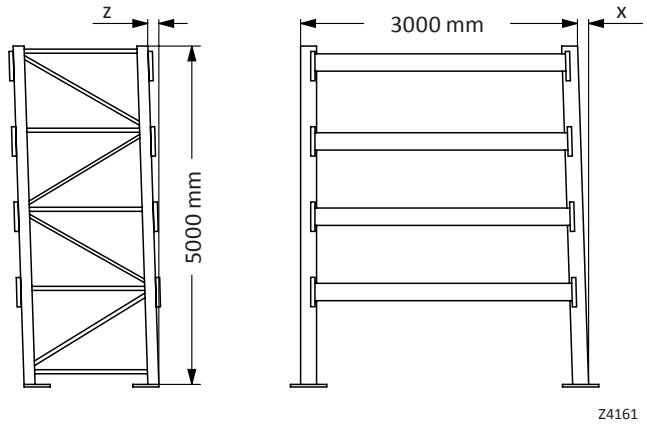

Fig. 24 Maximum permissible deviation from the vertical when installing shelving

Calculation example:

Deviations from the vertical:
x = z = shelving stand height / 200

Example:
x = z = 5000 mm / 200
x = z = 25 mm

REGULATION
EN 15620 and EN 15635

4.1.2 Maximum deflection of the load-bearing elements

The maximum deflection of the load-bearing elements (traverses), when the nominal load (max. perm. load) is applied, may not exceed 1 / 200 of the traverse length.

DANGER
Risk to life due to traverse fracture as a result of poor structural calculations.
➔ The maximum deflection of the traverses must not be exceeded.

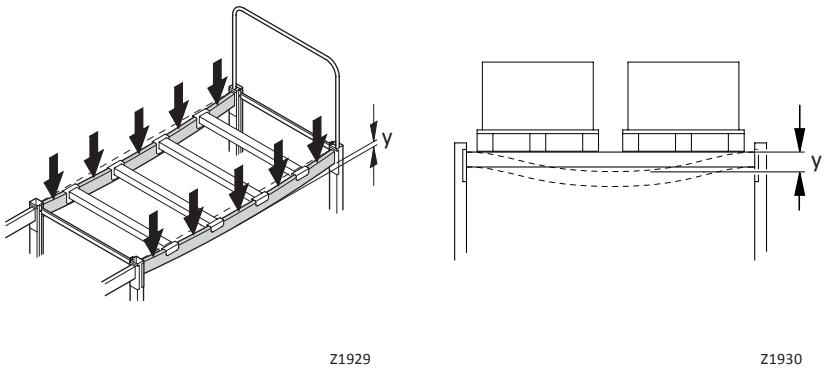

Fig. 25 Maximum permissible deflection of the traverses (y = maximum deflection)

Calculation example:

Maximum deflection:
y = traverse length / 200

Example:
Assumed traverse length = 3000 mm
y = 3000 mm / 200
y = 15 mm

REGULATION
EN 15635.

4.1.3 Damaged shelving components

DANGER
Risk to life due to shelving collapse as a result of damaged shelving components.
➔ If a shelving component is visibly damaged, any load on it must be removed from it and it must be replaced (see “chapter 2.2 Shelving inspection“, page 13).

Damaged shelving components no longer ensure the necessary stability and loading capacity. They can buckle or break and thus result in accidents.

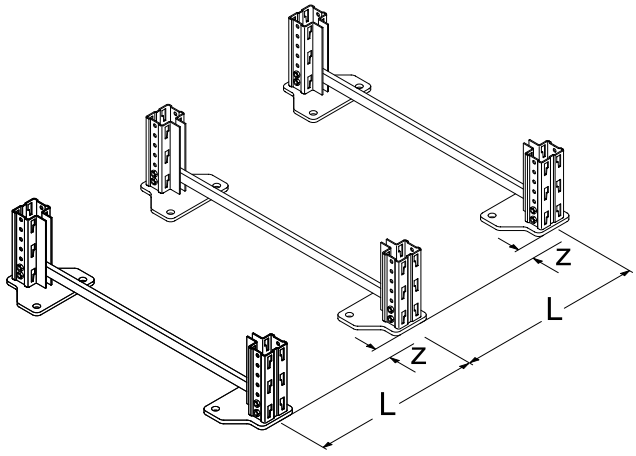

Fig. 26 Maximum allowable displacement of the shelving stands in the event of improper operation (L = stand spacing in lengthwise direction)

If the shelving stands are displaced, as shown in the following sketch, the displacement must not exceed 1 / 200 of the stand spacing in the lengthwise direction L.

Calculation example:

Maximum permissible deviation:
z = stand spacing L / 200

Example:
Stand spacing L = 2660 mm
z = 2660 mm / 200
z = 13.3 mm

REGULATION
RAL-RG 614

4.1.4 Handling loads and pallets in heavy-load shelving

DANGER
Risk to life due to shelving collapse resulting from improper handling of loads and pallets in heavy-load shelving.
➔ Pushing pallets over the traverses and sudden, jolted putting down of loads is not permitted, as it results in short-term exceeding of the load limits.

4.2 Stacking pallets

4.2.1 Stacking pallets

The pallet must be stacked in the middle in the depth direction. The maximum deviation of the centre of gravity of the load from the centreline must not be more than 50 mm. Always ensure that the pallet sits fully on the traverses or depth connectors.

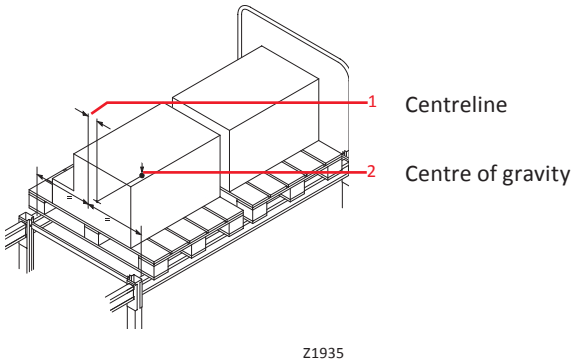

Fig. 27 Offset of the load centre of gravity from the centreline

4.2.2 Stacking pallets using industrial trucks

The owner / operating company must use industrial trucks with sufficiently long forks to stack pallets. The forks must be long enough to completely support the last board of the pallet.
The forks should not protrude beyond the pallet.
The permissible loading capacity of the pallets must not be exceeded.

DANGER
Risk to life due to falling stock as a result of insufficient loading capacity of the chipboards.
➔ The loading capacity details for the respective chipboards must be requested from the manufacturer or supplier of the chipboards and must be complied with.

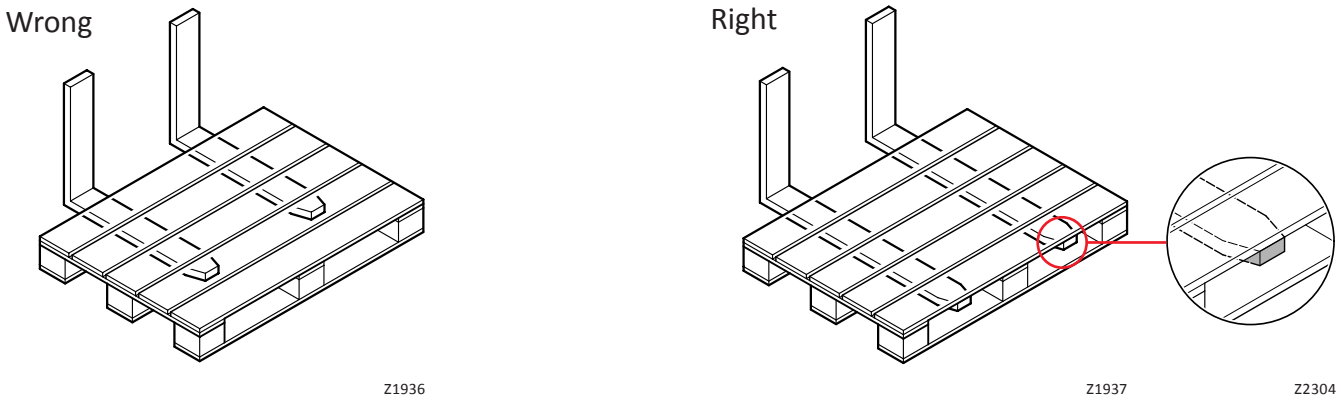

Fig. 28 Required fork lengths of the operating equipment

4.2.3 Crosswise stacking of the pallets

Depth connectors must always be provided for crosswise stacking. The number of depth connectors per pallet place results from the weight of the pallet to be placed in storage (see “chapter 5.3.1 Permissible load of the depth connectors“, page 29).
The distance between the depth connectors must be chosen to ensure stable support, safe against tilting or overturning. At least 2 depth connectors are to be used for each pallet, regardless of the load.

DANGER
Risk to life due to falling stock as a result of too few depth connectors used in relation to the pallet load.
➔ An adequate number of depth connectors per pallet must be used, see “chapter 5.3.1 Permissible load of the depth connectors“, page 29.

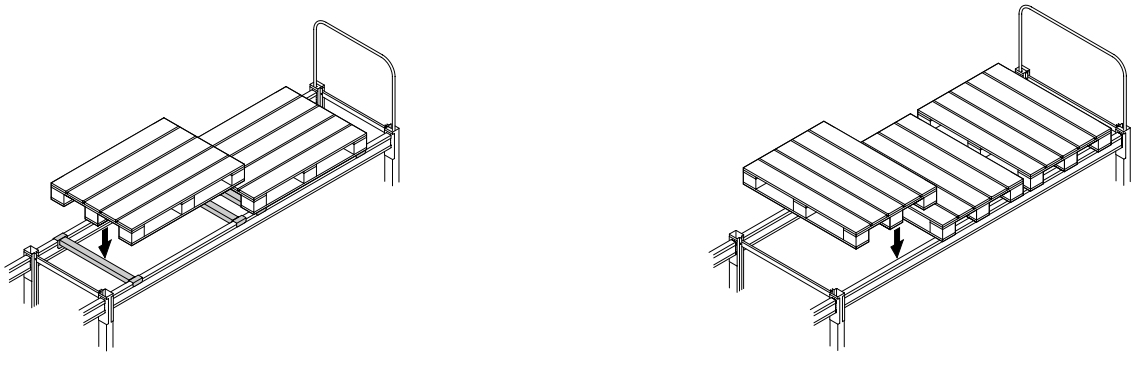

Fig. 29 Pallet stacked crosswise

Fig. 30 Pallet stacked lengthwise

4.3 Applicability of the guidelines for storage equipment and load carriers

4.3.1 Circulation areas and aisles

Storage equipment and load carriers must be set up and installed so that adequately dimensioned aisles are available. Circulation areas for pedestrians between storage equipment must be at least 1.25 m wide. Aisles, which are only intended for loading and unloading by hand (side aisles), must be at least 0.75 m wide.

Circulation areas for power driven or rail-bound handling equipment must be wide enough to ensure a safety distance of at least 0.5 m on both sides of the handling equipment. The space required for manoeuvring movements must also be taken into account in the dimensioning.

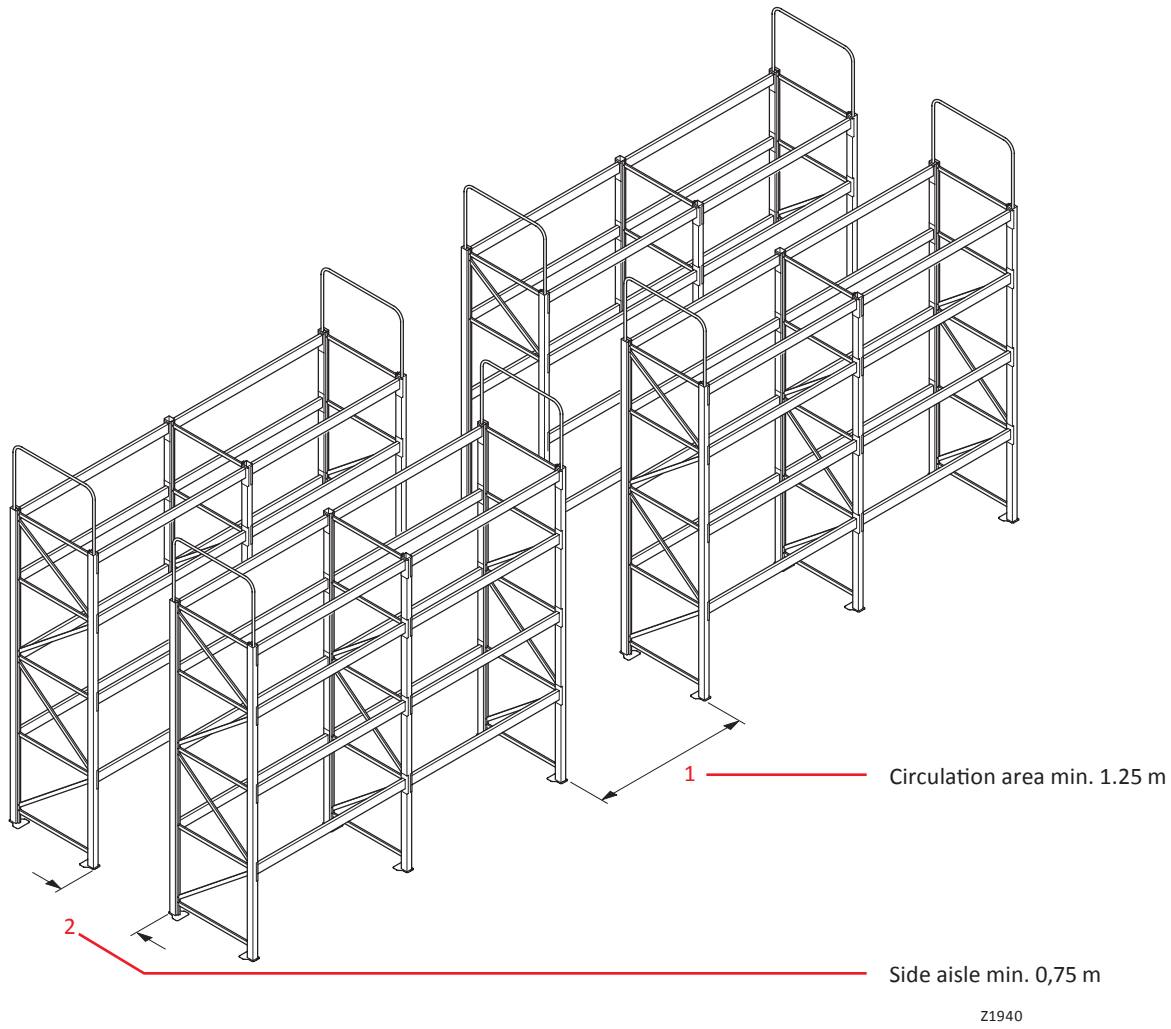

Fig. 31 Minimum aisle widths for shelving that is loaded and unloaded by hand only

4.3.2 Securing against falling out and falling unit loads and stock

- Components of shelving and cabinets must be designed or secured so that they cannot fall out or fall due to accidental loosening or unfastening.
- The sides of shelving not intended for loading and unloading must be secured to prevent unit loads from falling. The dimensioning of the safeguard must correspond to the dimensions and loads of the unit loads.
- For pallet storage the safeguards against falling unit loads must also be at least 0.5 m high at the top shelves and compartments too (see “chapter 4.3.2.1 Tow bow and higher end stands“, page 25).
- The areas above shelving passageways must be safely designed to prevent falling unit loads or falling through of stock.
- Double shelving, which is loaded from two sides by non-line-guided conveying equipment must have push-through guards, which must be effective up to a height of at least 150 mm (see page 25, Fig. 32).
- Push-through guards are not required if, for middle position storage, a safety distance of at least 100 mm is ensured between the largest unit loads inserted from both sides. In general, use of push-through guards is recommended for large shelving heights (including single shelving), especially if visual control is not possible when placing items on the shelving.
- Storage equipment and load carriers must be loaded so that the stock cannot fall out or fall. This includes adjusting the storage equipment and load carriers to the stock if the stock is changed.

Safety distance x < 100 mm

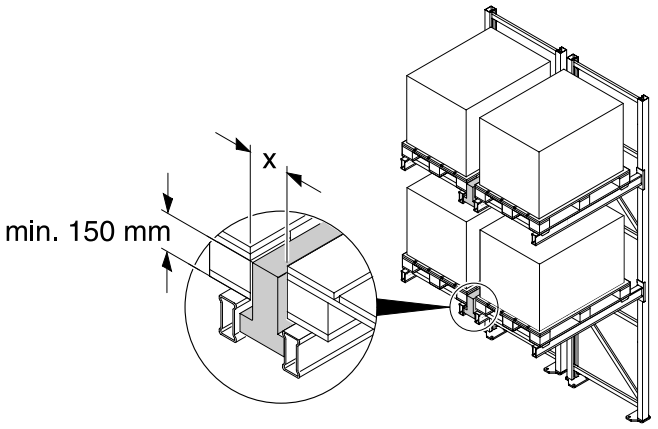

Z1941

Fig. 32 Double shelving with push-through guard

Safety distance x = > 100 mm

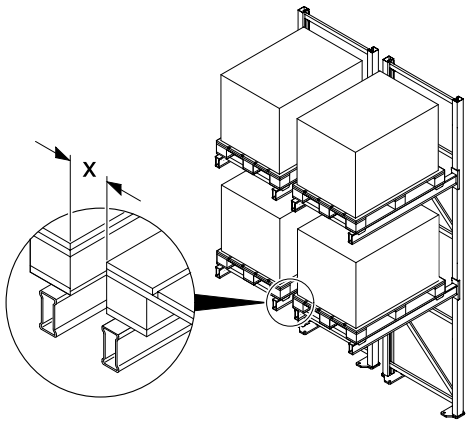

Z2926

Fig. 33 Double shelving without push-through guard

4.3.2.1 Tow bow and higher end stands

Start and end stands must be fitted with a tow bow or the start and end stands must protrude by at least 50 cm beyond the top traverse, to prevent unit loads from falling out at the sides.

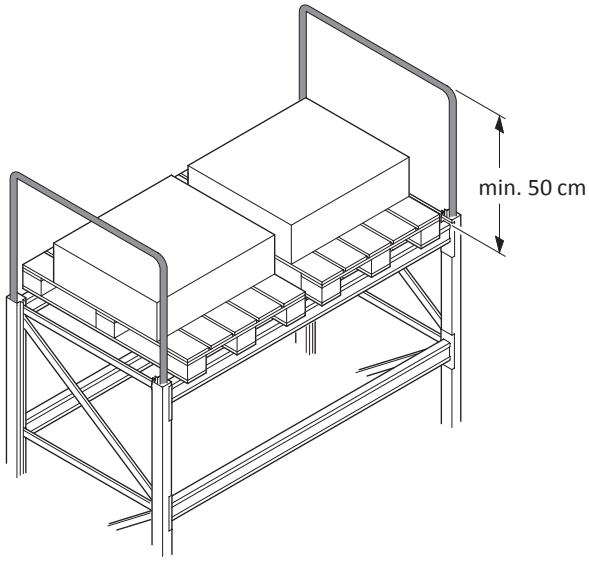

Z1931

Fig. 34 End stands with two bows

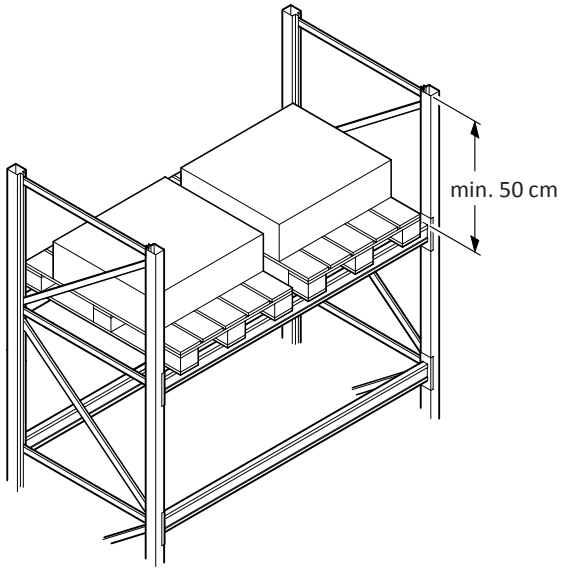

Z2197

Fig. 35 Longer start and end stands

4.3.3 Bumper

The shelving must not be run into or knocked. Bumpers (with yellow-black hazard markings) are mandatory in corner areas. To ensure the necessary stability, the shelving stands must be fixed onto the floor using the necessary anchors or dowels /plugs with bolts.

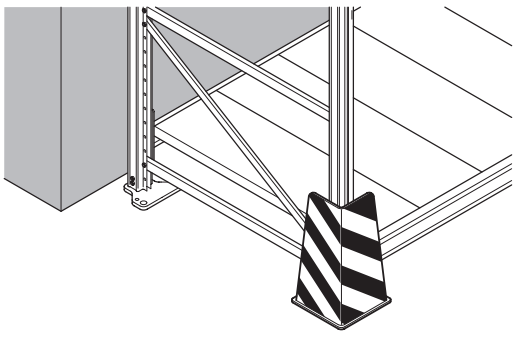

Z1933

Fig. 36 Bumper in the corner area

4.3.4 Labelling of the heavy-load shelving

The label for permissible loads shown in Fig. 37 and load sign shown in Fig. 38 must be permanently attached in a clearly visible position on fixed shelving with a compartment load of more than 200 kg or a bay load of more than 1000 kg.

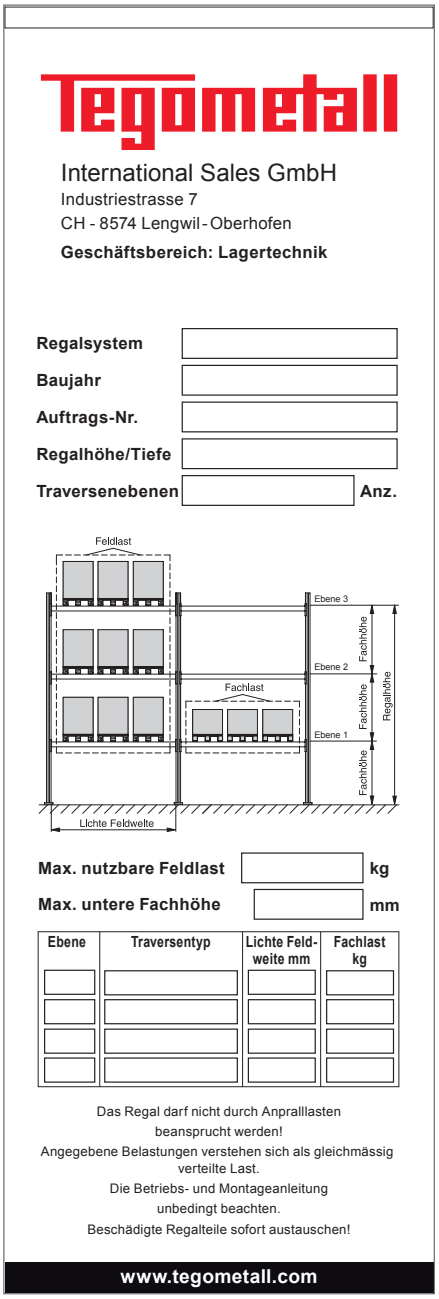

Fig. 37 Label for permissible loads

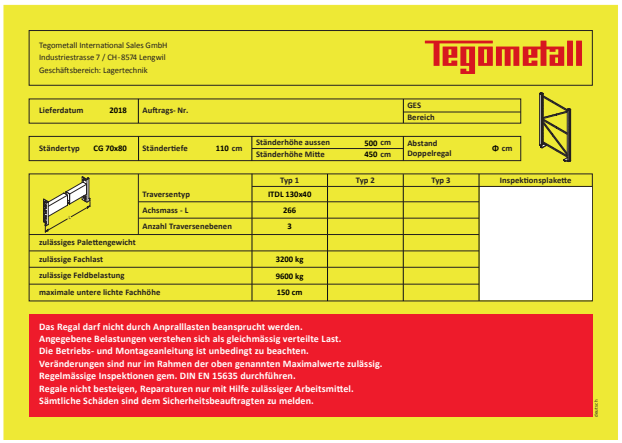

Fig. 38 Load sign

Assembly instructions

DANGER
Risk to life due to shelving collapse or toppling of the shelving as a result of poorly dimensioned standing areas.
➔ The load capacity and evenness of the floor on which the shelving stands must meet the named minimum requirements. All named deviations of the shelving stands from the vertical and horizontal must not exceed the limit values. The shelving must be adequately anchored in the floor using dowels or anchor bolts.

5.1 Installation site

5.1.1 Floor requirements

The standing areas for storage equipment and load carriers must be such that the self-weight and permissible use loads can be safely absorbed and supported.

5.1.2 Evenness of floors

The evenness of the floor, irrespective of whether an unfinished or finished floor, must conform to DIN 18202.

REGULATION
DIN 18202

Permissible floor unevenness	
up to 1 metre shelving length	4 mm
up to 4 metre shelving length	10 mm
up to 10 metre shelving length	12 mm
up to 15 metre shelving length	15 mm

Tab. 2 Permissible floor unevenness according to DIN 18202

5.2 Shelving assembly

5.2.1 Deviations of the shelving stands from the vertical and horizontal

When installing the shelving, ensure that the shelving stands are plumb (in a vertical position). Deviations of the shelving stands from the vertical, in lengthwise (x) or depth direction (z) of the shelving, must not exceed 1 / 350th of the shelving stand height. The height deviation from the horizontal (y), between the left and right fitting, must not exceed 1 / 500th of the traverse length.

REGULATION
Values apply to shelving class 400 only
EN 15620

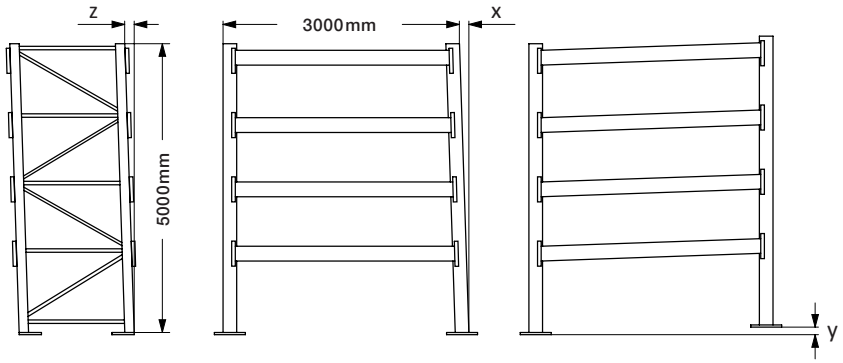

Deviations from the vertical:

Example:
x = z = shelving stand height / 350
x = z = 5000 mm / 350
x = z = 14.3 mm

Deviations from the horizontal (y):

Example:
y = traverse length / 500
y = 3000 mm / 500
y = 6 mm

Fig. 39 Maximum permissible deviation from the vertical and horizontal when installing shelving

5.2.1.1 Levelling out floor unevenness using sheet metal underlays

If the tolerances named in chapter “5.1.2 Evenness of floors”, page 27 are exceeded, sheet metal underlays of appropriate thickness must be installed under the shelving stands. The sheet metal underlays are available as accessories from Tegometall International Sales GmbH.

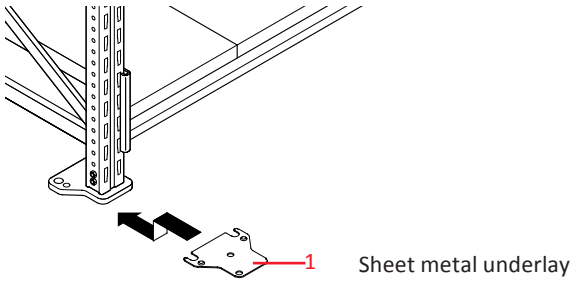

Fig. 40 Levelling out floor unevenness using a sheet metal underlay

5.2.2 Lift-out preventers

The hooked in traverses must be secured against accidental release. Lift-out preventers must be hooked in properly and completely. Two lift-out preventers must be inserted for each traverse, i.e. one on each insert plate (see page 17).

5.2.3 Fixing the shelving onto the floor

The shelving must be fixed onto the floor. The connection elements must be designed to ETAG No. 001 (European Technical Approval Guidelines).

Generally valid information cannot be provided for the fixing, as the requirements depend on the quality and condition of the substrate or floor. The installer of the shelving system is solely responsible for finding the right combination.

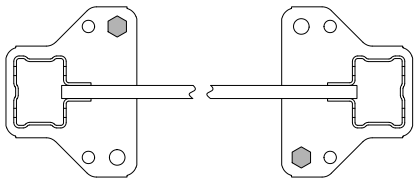

Fig. 41 Fixing the shelving onto the floor

REGULATION
ETAG No. 001
(European Technical Approval Guidelines)

NOTE
For heavy-load shelving System CG 55 × 40 we recommend that each support foot be fixed with at least one expanding (Hilti HSA M 8 × 75 or equivalent). For heavy-load shelving System CG / CI 70 × 80 and larger we recommend that each support foot be fixed with at least one expanding (Hilti HSL M 10 or equivalent).

5.3 Loading capacity

DANGER
Risk to life due to shelving collapse or toppling of the shelving as a result of exceeding the maximum permissible shelving loads.

➔ The maximum permissible load values of the shelving must not be exceeded.

The permissible load values are always determined on the basis of a load uniformly distributed over the entire pair of traverses.

5.3.1 Permissible load of the depth connectors

An adequate number of depth connectors must be placed uniformly on the traverses according to the planned shelving use.

The permissible load per depth connector for a maximum stand depth T is:

Permissible load per depth connector and recessed depth connector	
Stand depth	Per depth connector
up to T = 115 cm	500 kg
T = 135 cm	400 kg
T = 155 cm	350 kg

Tab. 3 Permissible load of the depth connectors and recessed depth connectors

Permissible load per FO depth connector and recessed FO depth connector		
Stand depth	Per FO depth connector	Per recessed FO depth connector
T = 80 cm	660 kg	440 kg
T = 85 cm	650 kg	440 kg
T = 105 cm	490 kg	440 kg
T = 115 cm	440 kg	440 kg

Tab. 4 Permissible load of the FO depth connectors and recessed FO depth connectors

5.3.2 Requirements for IT / ITD / ITG and ARP traverses

The load values listed below only apply if the following requirements are fulfilled:

- The traverse load given is a uniformly distributed load over the entire pair of traverses (see Fig. 42).
- The IT / ITG and ARP traverses must not be torsionally loaded (see Fig. 43).

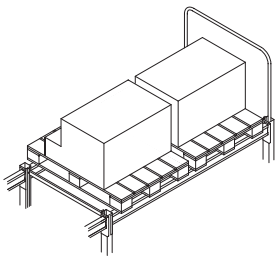

Z1935

Fig. 42 Load uniformly distributed over the entire pair of traverses.

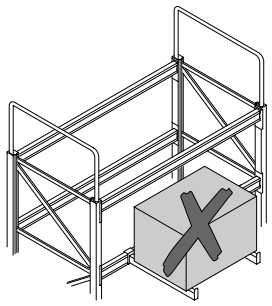

Z2355

Fig. 43 Impermissibly torsionally loaded traverse.

5.3.3 Permissible bay load for heavy-load shelving

When determining permissible load values for the shelving bay, base your calculation on the greatest bay height in each case.

For shelving with fewer than 4 shelving bays the bay load must be reduced using the following formula:

Bay load for 3 bays = **0.88** x Bay load (table value)
Bay load for 2 bays = **0.77** x Bay load (table value)
Bay load for 1 bay = **0.66** x Bay load (table value)

The load values given in Tab. 6, Tab. 7 and Tab. 8 (see page 30 / 31) are only valid if at least two pairs of traverses per bay are hooked in. In cases deviating from this, please always consult Tegometall International Sales GmbH.

5.3.4 System CG

5.3.4.1 Permissible traverse load with top and bottom weld-on position

NOTE
The load values are only valid if the requirements named under chapter 5.3.2 are fulfilled.

Permissible load per pair of traverses in kg (System CG 55 x 40 and System CG 70 x 80) Traverse with top and bottom weld-on position								
Axis spacing	ARPL 60 x 40	ARPL 80 x 40	ARPL 100 x 40	ARPL 120 x 40	ITDL 80 x 40	ITDL 100 x 40	ITDL 120 x 40	ITDL 130 x 40
L = 125 cm	800	2100	2500	3100	2100	2900	4500	4500
L = 133 cm	800	2100	2500	3100	2100	2900	4500	4500
L = 200 cm	480	1300	1700	3100	1200	1900	3100	4500
L = 250 cm	340	950	1400	2100	800	1500	2100	3600
L = 266 cm	300	850	1200	1900	700	1300	1900	3100
L = 300 cm	260	700	1000	1500	600	1100	1600	2600

Tab. 5 Permissible traverse load for the heavy-load shelving System CG 55 x 40 and CG 70 x 80 – Traverse with top and bottom weld-on position.

5.3.4.2 Permissible traverse load with middle weld-on position

NOTE
The load values are only valid if the requirements named under chapter 5.3.2 are fulfilled.

Permissible load per pair of traverses in kg (System CG 55 x 40 and System CG 70 x 80) Traverse with middle weld-on position								
Axis spacing	ARPL 60 x 40	ARPL 80 x 40	ARPL 100 x 40	ARPL 120 x 40	ITDL 80 x 40	ITDL 100 x 40	ITDL 120 x 40	ITDL 130 x 40
L = 125 cm	1000	2100	2500	3400	2100	2900	4500	4500
L = 133 cm	1000	2100	2500	3400	2100	2900	4500	4500
L = 200 cm	800	1400	1800	3000	1400	1900	3500	4500
L = 250 cm	550	1070	1500	2500	1200	1600	2600	3600
L = 266 cm	460	950	1350	2150	1100	1500	2300	3200
L = 300 cm	400	750	1120	1800	900	1200	1900	2600

Tab. 6 Permissible traverse load for the heavy-load shelving System CG 55 x 40 and CG 70 x 80 – Traverse with middle weld-on position.

5.3.4.3 Permissible bay load for heavy-load shelving without SB integration

Permissible bay load in kg		
Compartment height f	System CG 55 x 40 in combination with ITDL 80 x 40, ITDL 100 x 40, ARPL 80 x 40 and ARPL 100 x 40	System CG 70 x 80 in combination with ITDL 120 x 40, ITDL 130 x 40 and ARPL 120 x 40
75 cm	5200	16200
100 cm	4060	14200
125 cm	2980	12000
150 cm	1980	9800
175 cm	1880	8200
200 cm	1720	7000
225 cm		6000
250 cm		5000

Tab. 7 Permissible bay load for the heavy-load shelving System CG 55 x 40 without SB integration and System CG 70 x 80 without SB integration.

NOTE
The load values are only valid if the requirements named under chapter 5.3.2 are fulfilled.

5.3.4.4 Permissible bay load for heavy-load shelving System CG 55 x 40 with SB integration

DANGER
Risk to life due to shelving collapse resulting from impermissible torsional loading of the traverse.
➔ No not use plug-on parts for the middle upright - there must not be any connection between the stand of the SB integration and the traverse above it.

The permissible bay load applies up to shelving depth T of 155 cm in combination with traverse types ITDL 80 x 40, ITDL 100 x 40, ARPL 80 x 40 and ARPL 100 x 40.

Permissible bay load in kg System CG 55 x 40 with SB integration in combination with traverses ITDL 80 x 40, ITDL 100 x 40, ARPL 80 x 40 and ARPL 100 x 40			
Compartment height f over the bottom pair of traverses	Integration height		
	h = 200 cm	h = 220 cm	h = 240 cm
max. up to 160 cm	1220	960	810

Tab. 8 Permissible bay load for heavy-load shelving System CG 55 x 40 with SB integration.

5.3.4.5 Permissible bay load for heavy-load shelving System CG 70 x 80 with SB integration

The values apply up to a shelving depth T of 115 cm and in combination with the traverse types ITDL 120 x 40, ITDL 130 x 40 and ARPL 120 x 40.

Permissible bay load in kg System CG 70 x 80 with SB integration in combination with the traverses ITDL 120 x 40, ITDL 130 x 40 and ARPL 120 x 40			
Compartment height f over the bottom pair of traverses	Integration height		
	h = 220 cm	h = 240 cm	h = 260 cm
up to 750 cm	8500	7000	6200
100 cm	8000	6800	6000
125 cm	7500	6500	5700
150 cm	7200	6400	5600
175 cm	6900	6200	5400
200 cm	6700	6000	5300
225 cm	6500	5900	5200
250 cm	6400	5800	5100

Tab. 9 Permissible bay load for heavy-load shelving System CG 70 x 80 with SB integration.

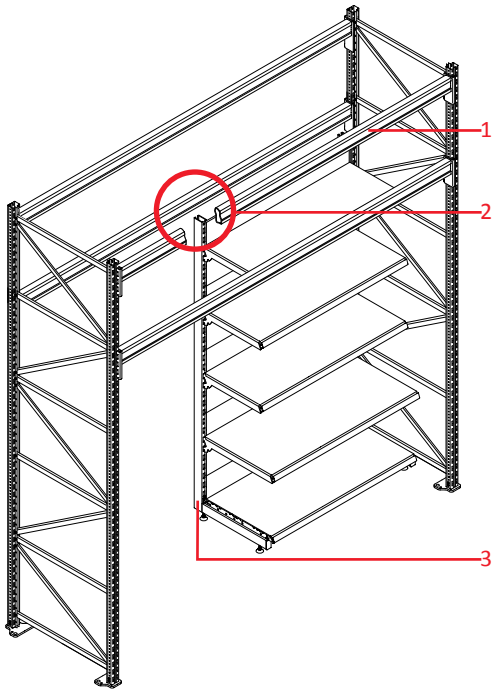

1 Traverse of the heavy-load shelving
2 There must be no connection between the stand of the SB integration and the traverse above it.
3 Stand of the SB integration

Fig. 44 Stands of the SB integration without connection to the traverse located above it.

5.3.5 System CI

5.3.5.1 Permissible traverse load of traverses ITDI, ITI and ARPI with middle weld-on position

Permissible load per pair of traverses ITDI, ITI and ARPI in kg for Systems CI 70 x 80, CI 85 x 80 and CI 100 x 80 – Traverse with middle weld-on position								
Axis spacing	ITDI 80 x 40	ITDI 100 x 40	ITDI 120 x 40	ITDI 130 x 40	ITI 140 x 40	ARPI 80 x 40	ARPI 100 x 40	ARPI 120 x 40
L = 183 cm	2100	2900	3800	4500	6750	1700	2500	3300
L = 223 cm	1600	2500	3200	4200	5600	1400	2150	2800
L = 273 cm	1150	1900	2700	3500	4600	1000	1700	2400

Tab. 10 Permissible traverse load for the industrial shelving of Systems CI 70 x 80, CI 85 x 80 and CI 100 x 80 traverse with middle weld-on position.

5.3.5.2 Permissible traverse load of the traverses ITGI with middle weld-on position

Permissible load per pair of traverses ITGI in kg for Systems CI 70 x 80, CI 85 x 80 and CI 100 x 80 – Traverse with middle weld-on position									
Axis spacing	ITGI 80 x 50 x 2.0	ITGI 100 x50 x 2.0	ITGI 120 x 50 x 2.0	ITGI 130 x 50 x 2.0	ITGI 140 x50 x 2.0	ITGI 140 x50 x 2.5	ITGI 150 x50 x 2.0	ITGI 150 x50 x 2.5	ITGI 150 x50 x 3.0
L = 183 cm	2300	3100	3900	4200	4400	5000	5000	5800	6100
L = 273 cm	1375	2200	3000	3300	3500	4100	4100	4900	5200
L = 293 cm	1200	2000	2800	3000	3300	3900	3900	4700	5000
L = 363 cm	500	1300	2100	2400	2800	3200	3200	4000	4400

Tab. 11 Permissible traverse load for the industrial shelving of Systems CI 70 x 80, CI 85 x 80 and CI 100 x 80 traverse with middle weld-on position.

5.3.5.3 Permissible bay load for industrial shelving System CI 70 x 80

NOTE
The values are valid up to a shelving depth of
T = 110 cm.

Permissible bay load in kg										
System CI 70 x 80 in combination with										
Compartment height f	ITDI 80 x 40	ITDI 100 x 40	ITDI 120 x 40 or ITDI 130 x 40	ITI 140 x 40	ITGI 80 x 50	ITGI 100 x 50	ITGI 120 x 50	ITGI 130 x 50	ITGI 140 x 50	ITGI 150 x 50
100 cm	10000	14000	15500	15500	10000	14000	15000	15000	15000	15000
125 cm	8500	11500	14000	14000	9000	12000	13500	14000	14000	14000
150 cm	7000	10000	12000	13000	8000	11000	12000	13000	13000	13000
175 cm	6000	8000	10000	11000	6500	9000	9500	10500	10500	11000
200 cm	5000	7000	9000	10500	6000	8500	9000	10000	10000	10500
225 cm	4500	6000	8000	9000	5500	7000	8000	8500	8500	9000

Tab. 12 Permissible bay load for the industrial shelving System CI 70 x 80.

5.3.5.4 Permissible bay load for industrial shelving System CI 85 x 80

NOTE
The values are valid up to a shelving depth of
T = 110 cm.

Permissible bay load in kg									
Compartment height f	System CI 85 x 80 in combination with								
	ITDI 120 x 40	ITDI 130 x 40	ITI 140 x 40	ITGI 80 x 50	ITGI 100 x 50	ITGI 120 x 50	ITGI 130 x 50	ITGI 140 x 50	ITGI 150 x 50
100 cm	18000	18000	18000	12500	16000	18000	18000	18000	18000
125 cm	16000	16000	17000	11000	14500	16000	16500	17000	17500
150 cm	14000	14000	16000	9500	12000	14000	15000	16000	16000
175 cm	12000	13500	14500	8000	9500	12000	13500	14500	14500
200 cm	10000	12000	13000	7000	9000	10500	12000	13000	13000
225 cm	9000	11000	11000	6000	7500	9500	10500	11000	11500

Tab. 13 Permissible bay load for the industrial shelving System CI 85 x 80.

5.3.5.5 Permissible bay load for industrial shelving System CI 100 x 80

NOTE
The values are valid up to a shelving depth of
T = 110 cm.

Permissible bay load in kg									
Compartment height f	System CI 100 x 80 in combination with								
	ITDI 120 x 40	ITDI 130 x 40	ITI 140 x 40	ITGI 80 x 50	ITGI 100 x 50	ITGI 120 x 50	ITGI 130 x 50	ITGI 140 x 50	ITGI 150 x 50
100 cm	18000	18000	20000	15000	17000	20000	20000	20000	20000
125 cm	17000	17000	18000	12000	15500	17000	17500	18000	18500
150 cm	14000	16000	16000	10500	13000	14000	15000	16000	16500
175 cm	12000	15000	15000	9500	10500	12500	13500	14500	14500
200 cm	11000	13000	13000	8500	10000	11000	12000	13000	13000
225 cm	9000	11000	11500	7000	9000	10000	11000	11000	11500

Tab. 14 Permissible bay load for the industrial shelving System CI 100 x 80.

5.3.6 Permissible load per shelving element

DANGER
Risk to life due to shelving collapse or falling stock as a result of exceeding the maximum permissible loads.
- ➔ The maximum permissible load values of the shelving elements must not be exceeded.
- ➔ The total load of the shelving elements must not exceed the permissible load of the traverses.

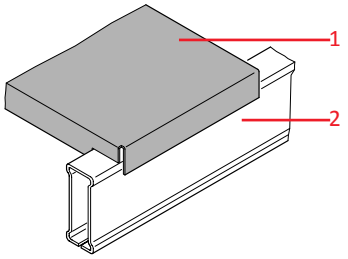

Fig. 45 IT traverse with shelving elements

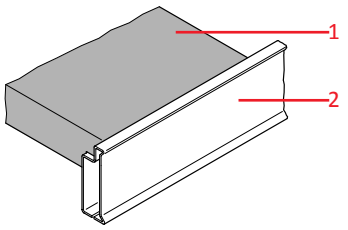

Fig. 46 ARP traverse with inserted shelving element ARP

The permissible load per shelving element is 350 kg provided the following requirements are fulfilled:

- The shelving elements are positioned on IT / ITD / ITG traverses or on ARP traverses.
- That the maximum stand depth T 115 cm is not exceeded.
- That uniform load distribution is ensured.
- The shelving elements IT / ITD / ITG fit only on the IT / ITD / ITG traverses.
- The shelving elements ARP only fit on the ARP traverses.

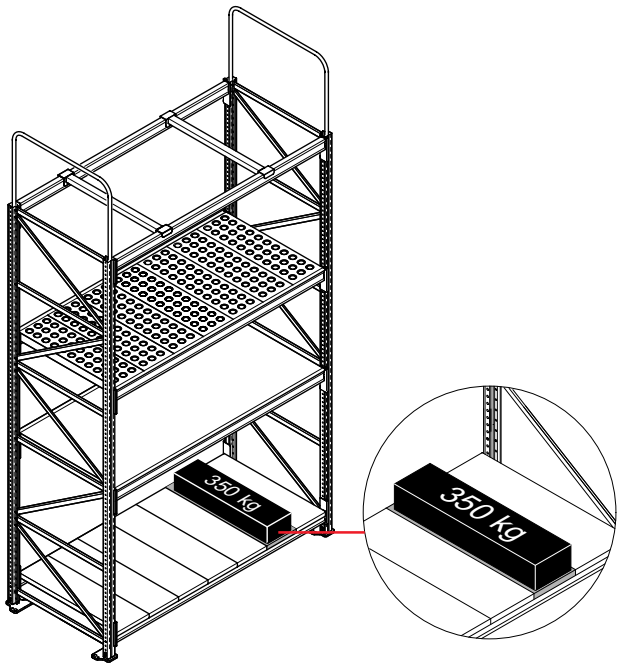

Fig. 47 Permissible load per shelving element, positioned here on IT traverses.

5.3.7 Permissible load per fire protection shelving element

DANGER
Risk to life due to shelving collapse or falling stock as a result of exceeding the maximum permissible loads.
➔ The maximum permissible load values of the fire protection shelving elements must not be exceeded.
➔ The total load of the shelving fire protection elements must not exceed the permissible load of the traverses.

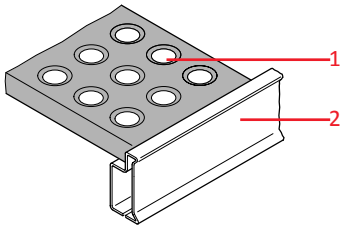

1 Fire protection shelving element ARP
2 ARP traverse

Z1926

Fig. 48 ARP traverse with inserted fire protection shelving element ARP

The permissible load per fire protection shelving element is 60 kg provided the following requirements are fulfilled:

- The fire protection shelving elements ARP are positioned on ARP traverses.
- That the maximum stand depth T 105 cm is not exceeded.
- That uniform load distribution is ensured.
- The fire protection shelving elements ARP fit only on the ARP traverses.

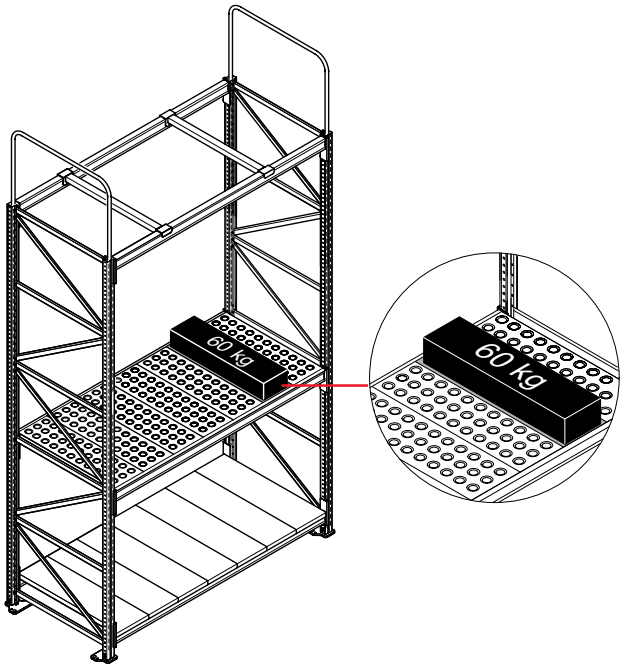

Z1947

Fig. 49 Permissible load per fire protection shelving element ARP, positioned here on ARP traverses

5.4 Calculation examples for the permissible compartment and bay loads

5.4.1 Determination of the permissible compartment and bay loads for System CG 70 x 80 without SB integration in combination with traverse type ITDL 130 x 40

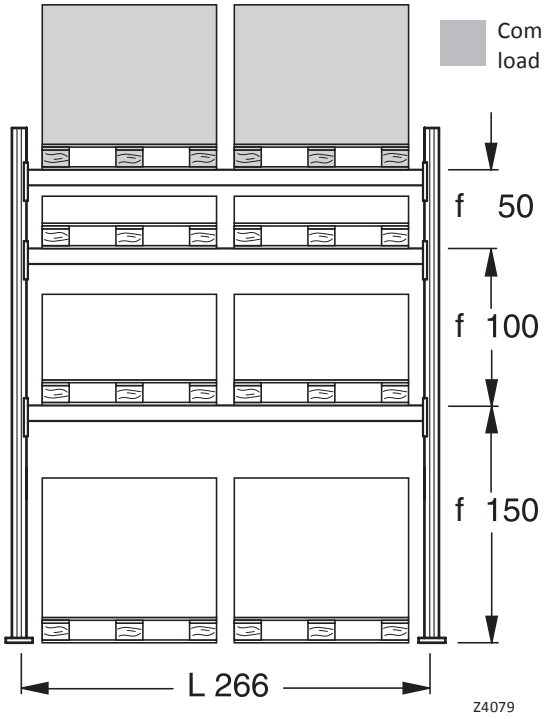

Fig. 50 System CG 70 x 80 without SB integration

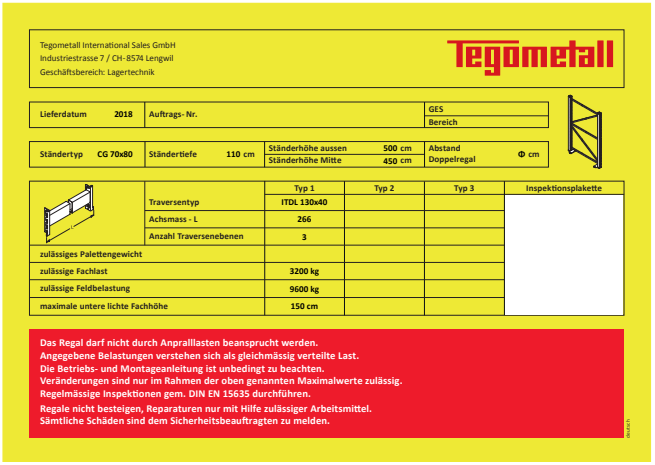

Fig. 51 Filled load sign

Inputs for the calculation example:
4 shelving bays
3 pairs of traverses ITDL 130 x 40
Axis spacing L 266 cm
Maximum compartment height F 150 cm

Determination of permissible bay load:
When determining the permissible bay load, the biggest compartment height is always taken as a basis.
Permissible bay load = **9800 kg** (see page 30, Tab. 7).

Determination of permissible load per pair of traverses:
Permissible load per pair of traverses ITDL centre 130 x 40 for an axis spacing L of 266 cm = **3200 kg** (see page 30, Tab. 6).

Calculation of the pro rata compartment load:
Pro rata compartment load: the shelving system has 3 shelves per bay, the pro rata compartment load is thus:

$$\text{Compartment load} = \frac{\text{Permissible bay load}}{\text{Number of shelves per bay}} = \frac{9800\ \text{kg}}{3} = \mathbf{3267\ kg}$$

Determination of the permissible compartment load:

NOTE
The pro rata compartment load is compared to the permissible load per pair of traverses. **The permissible compartment load then always results from the smaller of the two values.**

- Permissible load per pair of traverses ITDL centre 130 x 40 = **3200 kg** (for an axis spacing L of 266 cm)
- Compartment load = **3267 kg**

Permissible compartment load: 3200 kg.
The permissible bay load is 3 x 3200 kg = 9600 kg.

The permissible **load per pair of traverses** (ITDL centre 130 x 40 with **3200 kg**) is **smaller** than the pro rata compartment load with 3267 kg and is thus the relevant value for the permissible compartment load.

5.4.2 Determination of the permissible compartment and bay loads for System CG 70 x 80 with SB integration in combination with traverse type ITDL 130 x 40

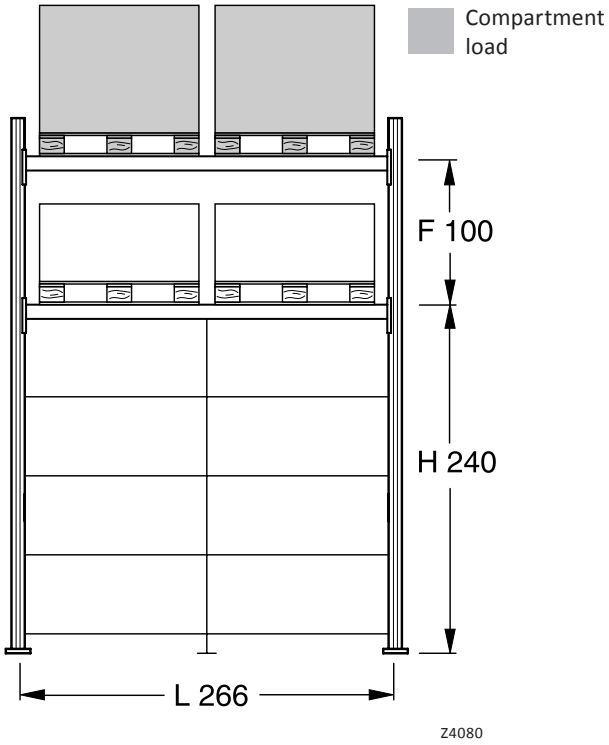

Fig. 52 System CG 70 x 80 with SB integration

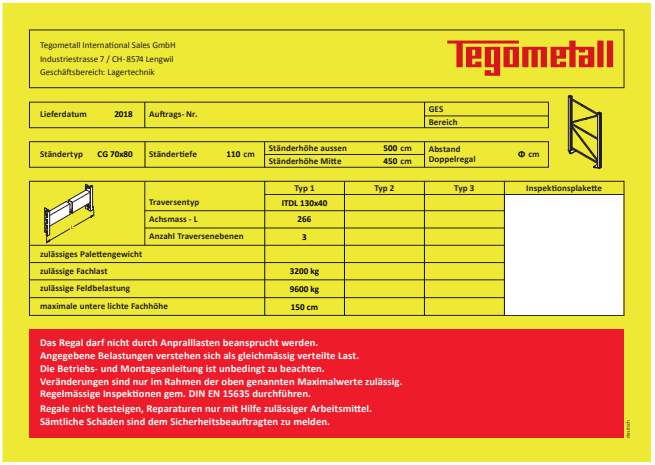

Fig. 53 Filled load sign

NOTE

- The lowest pair of traverses must always be executed together with the central pair of traverses.
- The permissible loads of the integration parts are given in the current “Full Catalogue” of Tegometall International Sales GmbH.
- Do not use plug-on parts for central upright of SB integration (see Fig. 44, page 31).

Inputs:
4 shelving bays
2 pairs of traverses ITDL 130 x 40
Axis spacing L 266 cm
Maximum compartment height F 150 cm
Maximum integration height H 220 cm

Determination of permissible bay load:
When determining the permissible bay load, the biggest compartment height is always taken as a basis.
Permissible bay load = **8000 kg** (see page 31, Tab. 9).

Determination of permissible load per pair of traverses:
Permissible load per pair of traverses ITDL centre 130 x 40 for an axis spacing L of 266 cm = **3200 kg** (see page 30, Tab. 6).

Calculation of the pro rata compartment load:
Pro rata compartment load: the shelving system has 2 shelves per bay, the pro rata compartment load is thus:

$$\text{Compartment load} = \frac{\text{Permissible bay load}}{\text{Number of shelves per bay}} = \frac{8000\ \text{kg}}{2} = \mathbf{4000\ kg}$$

Determination of the permissible compartment load:

NOTE
The pro rata compartment load is compared to the permissible load per pair of traverses. **The permissible compartment load then always results from the smaller of the two values.**

- Permissible load per pair of traverses ITDL centre 130 x 40 = **3200 kg** (for an axis spacing L of 266 cm)
- Compartment load = **4000 kg**

Permissible compartment load: 3200 kg.
The permissible bay load is 2 x 3200 kg = 6400 kg.

The permissible **load per pair of traverses** (ITDL centre 130 x 40 with **3200 kg**) is **smaller** than the pro rata compartment load with 4000 kg and is thus the relevant value for the permissible compartment load.

5.4.3 Determination of permissible bay and compartment loads for system CI 85 x 80 in combination with traverse type ITDI 130 x 40

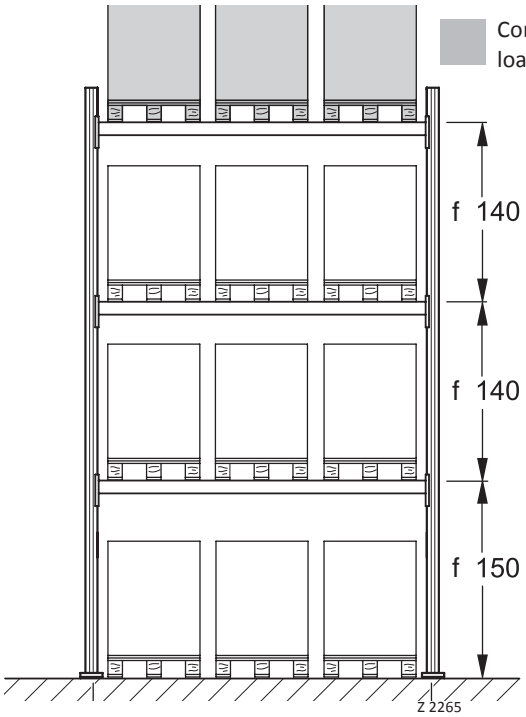

Fig. 54 System CI 85 x 80

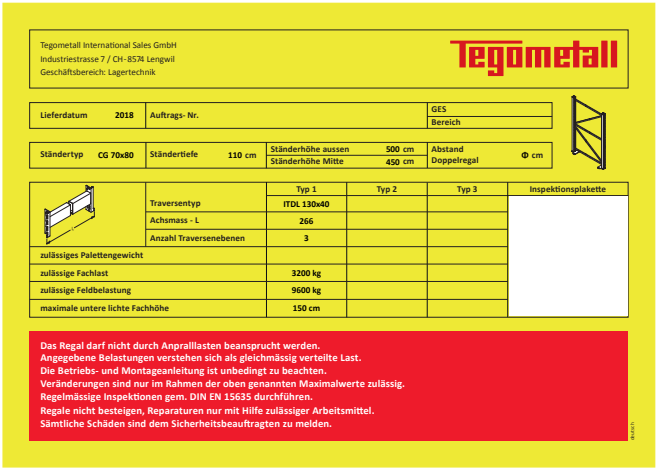

Fig. 55 Filled load sign

Inputs for the calculation example:
4 shelving bays
3 pairs of traverse ITDI centre 130 x 40
Axis spacing L 273 cm
Maximum compartment height f 150 cm

Determination of permissible bay load:
When determining the permissible bay load, the biggest compartment height is always taken as a basis.
Permissible bay load = 14000 kg (see page 33, Tab. 13).

Determination of permissible load per pair of traverses:
Permissible load per pair of traverses ITDI centre 130 x 40 with an axis spacing L of 273 cm = 3500 kg (see page 32, Tab. 10).

Calculation of the pro rata compartment load:
Pro rata compartment load: the shelving system has 3 shelves per bay, the pro rata compartment load is thus:

$$\text{Compartment load} = \frac{\text{Permissible bay load}}{\text{Number of shelves per bay}} = \frac{14000\ \text{kg}}{3} = \mathbf{4666.7\ kg}$$

Determination of the permissible compartment load:

NOTE
The pro rata compartment load is compared to the permissible load per pair of traverses. **The permissible compartment load then always results from the smaller of the two values.**

- Permissible load per pair of traverses ITDI centre 130 x 40 = 3500 kg (for an axis spacing L of 273 cm)
- Compartment load = **4666.7 kg**

Permissible compartment load: 3500 kg.
The permissible bay load is 3 x 3500 kg = 10500 kg.

The permissible **load per pair of traverses** (ITDI centre 130 x 40 with **3500 kg**) is **smaller** than the pro rata compartment load with 4666.7 kg and is thus the relevant value for the permissible compartment load.

Chapter 6

Assembly Instructions for the Bolted Stands

6.1 Important

6.1.1 Scope of these assembly instructions

These instructions describe the assembly and installation of the bolted stands.

These stands are available in different heights and depths, we therefore recommend that you sort the contents of the packages according to the parts lists and check them for completeness before starting to assemble the shelving.

If reference is made to parts lists, the lists for the relevant shelving type are given at the end of these assembly instructions.

Depending on the shelving type (height and depth), different lengths and quantities of struts are required when installing the bolted stands. Refer to parts lists page 48 to page 57 for this information.

NOTE
The item numbers given in these assembly instructions refer to the item numbers in the parts lists on page 48 to page 57.

6.1.2 Safety instructions

- The technical rules and regulations of these assembly instructions and the entire operation instructions for heavy-load shelving must be complied with at all times.
- The safety provisions described in Chapter 2 apply!
- The position of the struts must correspond exactly to the information given in the assembly instructions. We refuse all liability and guarantee in case of unauthorised changes. The position of the struts is of decisive importance for the stability of the stand frame.

6.1.3 Bolting instructions

The fixing bolts and nuts are to be used according to the following regulation:

- The nuts must always be screwed onto the bolts by hand.
- If a nutrunner (cordless or pneumatic) is used to finally screw the nut onto the bolt, the following must be noted:
  - If possible, use nutrunner with torque.
  - If a nutrunner without torque control is used, ensure that the support profile is not pressed together – i.e. do not tighten the bolt to "block".
- The automatic nutrunner must have a suitable holder for the relevant bolt head, as this is the only way to ensure proper screwing on of the nut.
- The bolts should be “dollied” (held in place) with a spanner while the nut is being screwed on.
- In System CG 55 x 40 the horizontal and diagonal struts are bolted into the stand profiles using Torx T 30 6 x 20 bolts (see Fig. 56).

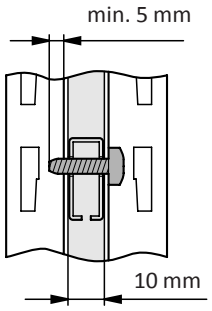

Fig. 56 Bolting of the struts using Torx T 30 6 x 20 on the stand profiles (System CG 55 x 40).

Tightening torques depending on the shelving system		
Type	Stand foot	Strut
55x40	10 Nm	10 Nm
70x80	10 Nm	10 Nm
85x80	10 Nm	10 Nm
100x80	10 Nm	10 Nm

Tab. 15 Tightening torques of the bolts for assembly of the bolted stands.

6.2 Installing the bolted stands without special equipment

6.2.1 Positioning the stand profiles

Place the stand profiles (Item 1) on two jack stands or similar and move so that they are stand depth (dimension T) apart (see Fig. 57 and Fig. 58).

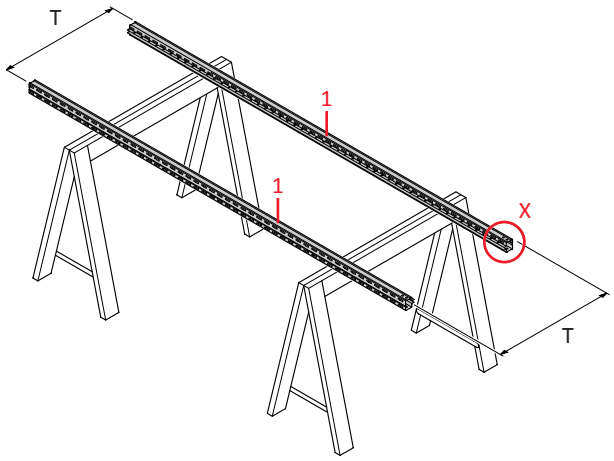

Z2009

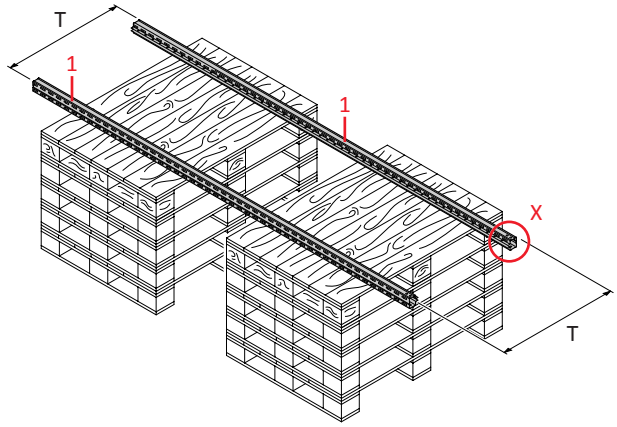

Z2010

1 Stand profiles
T Stand depth T
X Detail, see Fig. 58

Fig. 57 Aligning the stand profiles to stand depth.

NOTE
The two stand profiles must be aligned in the same way.

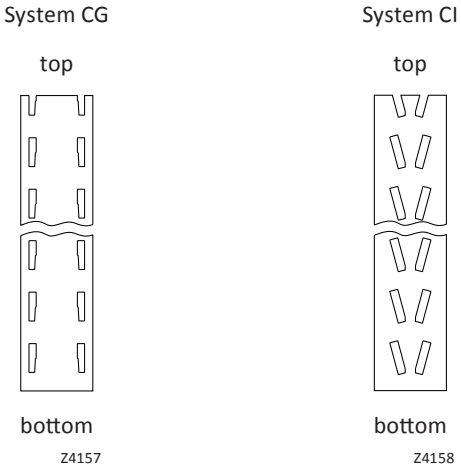

Fig. 58 Align the stand profiles in the correct position.

6.2.2 Installing the horizontal struts

Struts are always installed with the opening facing downwards and the fixing hole facing upwards (see Fig. 59).

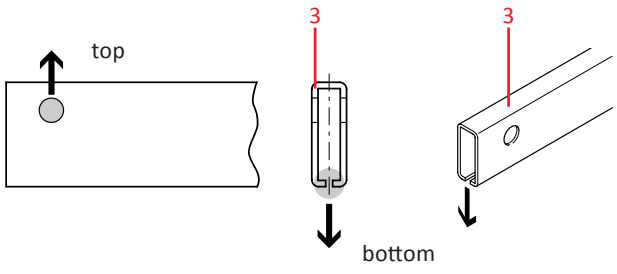

Z2012

3 Strut, horizontal

Fig. 59 Installing the horizontal struts. (The opening must face downwards!).

6.2.2.1 Installing the horizontal struts – System CG 55 x 40

Insert horizontal struts (Item 3) into the stand profile at a spacing of 65 cm from the bottom up, starting in the 2nd fixing hole (8.7 cm) (see Fig. 60). They are bolted with Torx T 30 6 x 20 (see Fig. 62).

NOTE
Note and follow the bolting instructions page 39!

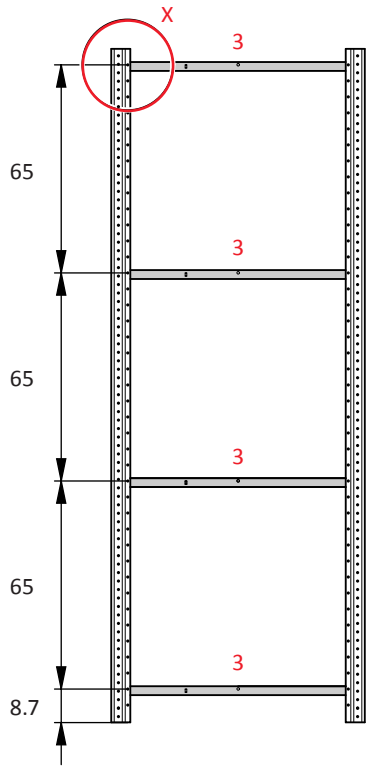

3 Strut, horizontal
X Detail, see Fig. 62

Fig. 60 Spacing of the horizontal struts for System CG 55 x 40 (dimensions in cm).

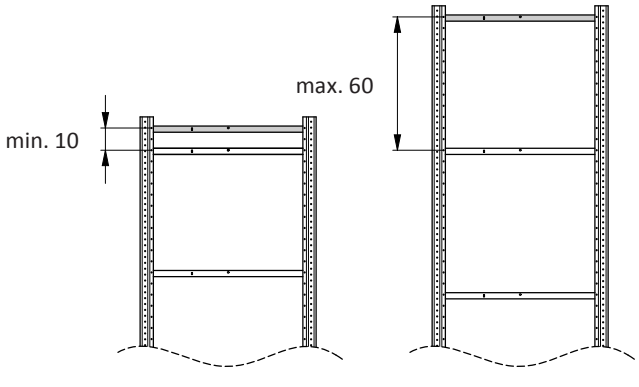

Fig. 61 Min. / max. spacing for a further horizontal strut in System CG 55 x 40 (dimensions in cm).

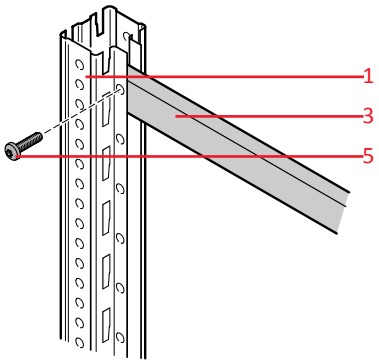

1 Stand profile
3 Strut, horizontal
5 Torx T 30 6 x 20

Fig. 62 The horizontal struts are bolted into the stand profile using Torx T 30 6 x 20.

NOTE
Depending on the stand height (outside of the 65 cm grid dimension), the stand profiles protrude beyond the top horizontal strut. In this case a further horizontal strut must be mounted in the top fixing option (see Fig. 61).

6.2.2.2 Installing the horizontal struts – System CG / CI 70 x 80

Insert horizontal struts (Item 3) into the stand profile at a spacing of 100 cm from the bottom up, starting in the 2nd fixing hole (8.7 cm) (see Fig. 63). Insert fixing bolts M 8 x 30 from above and screw on nuts M 8 by hand (see Fig. 65).

NOTE
Note and follow the bolting instructions page 39!

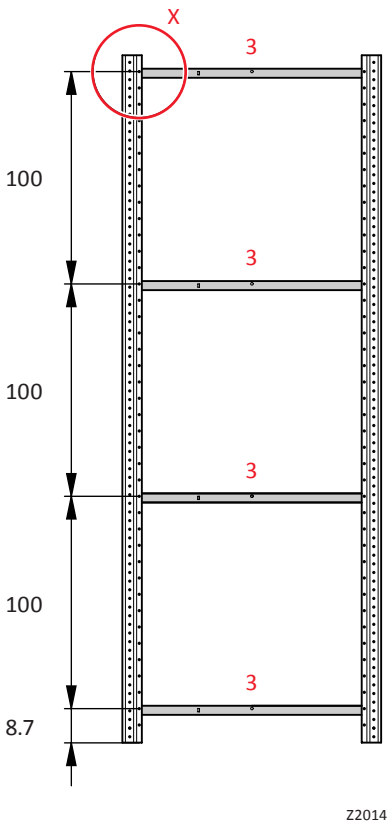

3 Strut, horizontal
X Detail, see Fig. 65

Fig. 63 Spacing of the horizontal struts in System CG / CI 70 x 80 (dimensions in cm).

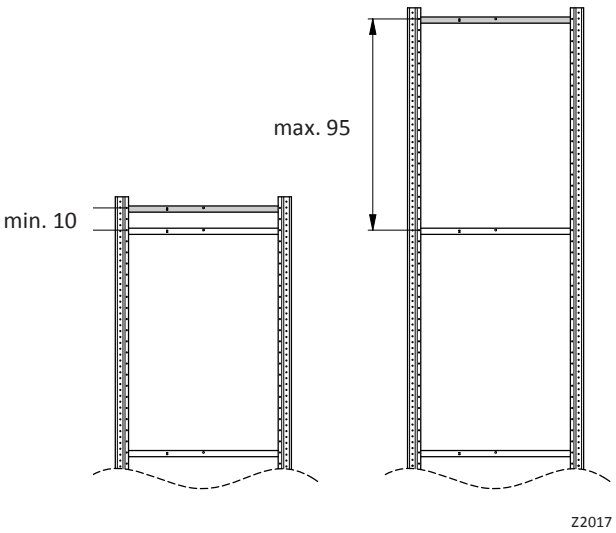

Fig. 64 Min. / max. spacing for a further horizontal strut in System CG / CI 70 x 80 (dimensions in cm).

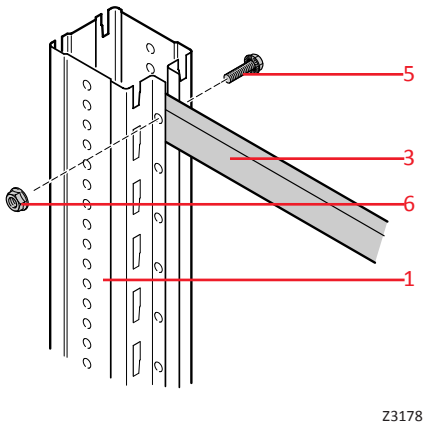

1 Stand profile
3 Strut, horizontal
5 Fixing bolt
6 Nut

Fig. 65 The horizontal struts are bolted into the stand profile using Torx T 30 6 x 20.

NOTE
Depending on the stand height (outside of the 100 cm grid dimension), the stand profiles protrude beyond the top horizontal strut. In this case an additional horizontal strut must be mounted in the top fixing option (see Fig. 64).

6.2.3 Installing the diagonal struts – System CG 55 x 40 and System CG / CI 70 x 80

Insert diagonal struts (Item 2) in the stand profile, consecutively from the bottom up.

NOTE
The diagonal struts must be installed in ascending order (see Fig. 66 and Fig. 67).

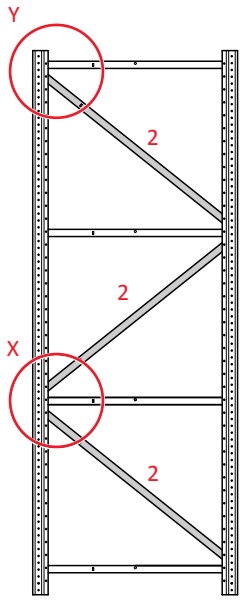

Z2018

2 Strut, diagonal
X For detail see
Fig. 68 (System CG 55 x 40)
Fig. 70 (System CG / CI 70 x 80)
Y For detail see
Fig. 69 (System CG 55 x 40)
Fig. 71 (System CG / CI 70 x 80)

Fig. 66 Installation of the diagonal struts in ascending order.

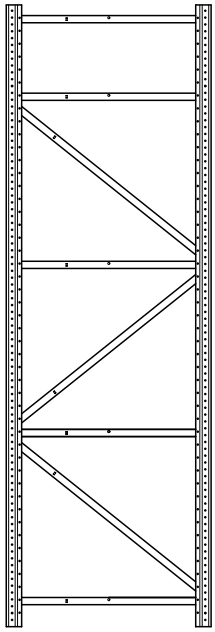

Z2019

Fig. 67 Stands fully assembled, with additional horizontal strut.

6.2.3.1 Installing the diagonal struts – System CG 55 x 40

In System CG 55 x 40 the diagonal struts are bolted into the stand profiles using Torx T 30 6 x 20.

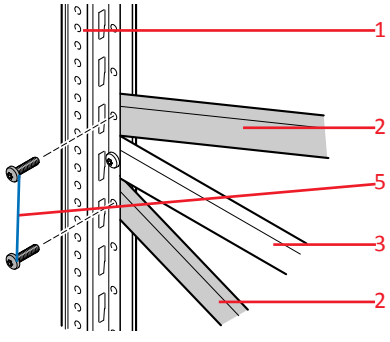

Z2020

1 Stand profile
2 Strut, diagonal
3 Strut, horizontal
5 Torx T 30 6 x 20

Fig. 68 Detail X (System CG 55 x 40)

NOTE
Note and follow the bolting instructions page 39!

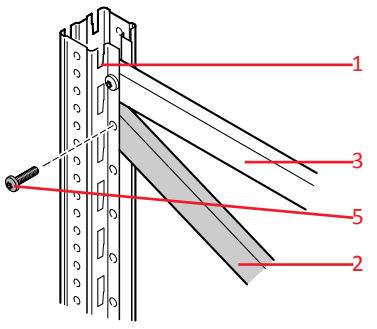

Z2021

1 Stand profile
2 Strut, diagonal
3 Strut, horizontal
5 Torx T 30 6 x 20

Fig. 69 Detail Y (System CG 55 x 40)

6.2.3.2 Installing the diagonal struts – System CG / CI 70 x 80

Insert fixing bolts M 8 x 30 from above and screw on nuts M 8 by hand

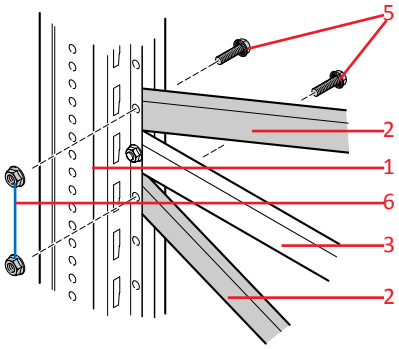

Z3179

1 Stand profile
2 Strut, diagonal
3 Strut, horizontal
5 Fixing bolt
6 Nut

Fig. 70 Detail X (System CG / CI 70 x 80)

NOTE
Note and follow the bolting instructions page 39!

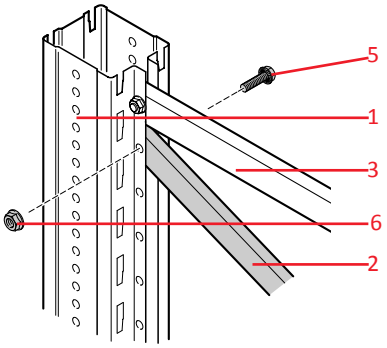

Z3180

1 Stand profile
2 Strut, diagonal
3 Strut, horizontal
5 Fixing bolt
6 Nut

Fig. 71 Detail Y (System CG / CI 70 x 80)

6.2.4 System CI 85 x 80 and System CI 100 x 80 – installing horizontal and diagonal struts

In shelving systems CI 85 x 80 and CI 100 x 80 the horizontal struts (Item 3) and the diagonal struts (Item 2) must be bolted at the same time.

The horizontal struts (Item 3) and the diagonal struts (Item 2) are installed overlapping at the mounting points Y (see Fig. 73) using a bolt. The first horizontal strut is inserted into the 2nd fixing hole (8.7 cm) in the stand profile. On the side on which no diagonal strut is bolted together with the horizontal strut a spacer (Item 9 see Fig. 72) must be inserted as a balance (see Detail X, Fig. 74). This spacer must also be used at all other mounting points marked with X (see Fig. 73).

Insert the fixing bolts M 8 x 45 from above and screw on nuts M 8 by hand (see Fig. 74 and Fig. 75).

NOTE
Note and follow the bolting instructions page 39!

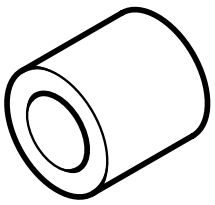

Z2267

Fig. 72 Spacer (Item 9) as spacer bracket for the horizontal struts, System CI 85 x 80 and System CI 100 x 80.

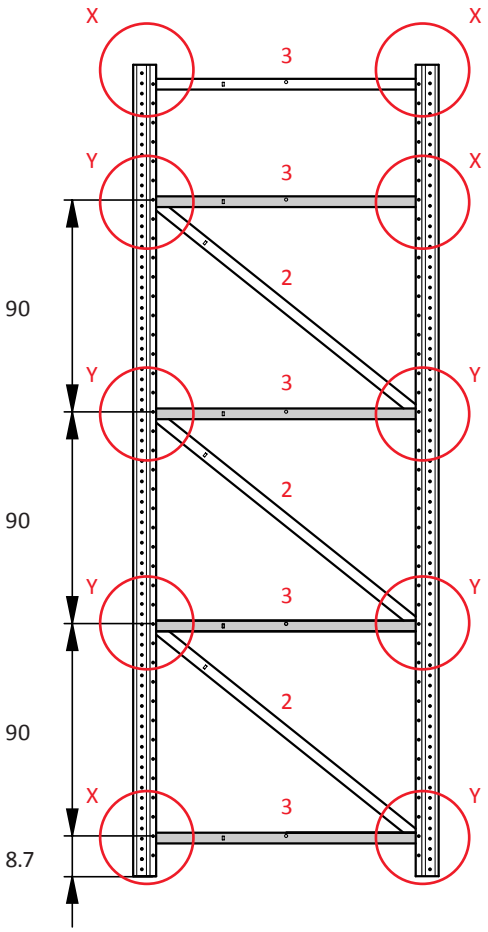

Z2267

2 Strut, diagonal
3 Strut, horizontal
X Detail, see Fig. 74
Y Detail, see Fig. 75

Fig. 73 Spacing of the horizontal struts in System CI 85 x 80 and System CI 100 x 80 (dimensions in cm).

Assembly Instructions for the Bolted Stands

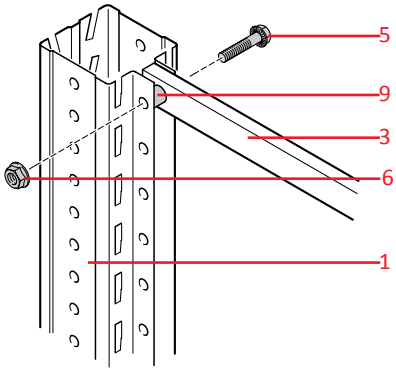

Z2218

1 Stand profile
3 Strut, horizontal
5 Fixing bolt
6 Nut
9 Spacer

Fig. 74 Detail X
Installing the spacer for the shelving systems CI 85 x 80 and CI 100 x 80.

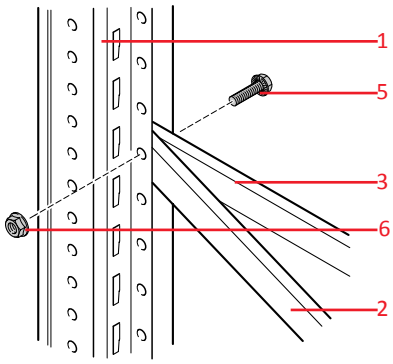

Z2224

1 Stand profile
2 Strut, diagonal
3 Strut, horizontal
5 Fixing bolt
6 Nut

Fig. 75 Detail Y
The overlapping installation of the horizontal and diagonal struts in shelving system CI 85 x 80 and CI 100 x 80.

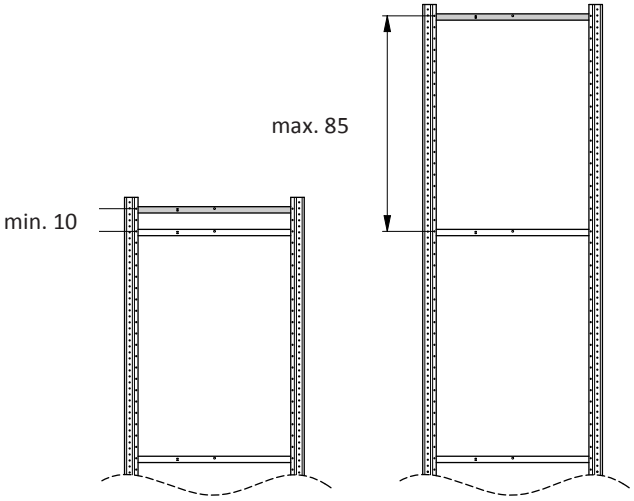

Z2281

Fig. 76 Min. / max. spacing for a further horizontal strut in System CI 85 x 80 and System C 100 x 80 (dimensions in cm).

NOTE
Depending on the stand height (outside of the 90 cm grid dimension), the stand profiles protrude beyond the top horizontal strut. In this case a further horizontal strut must be mounted in the top fixing option (see Fig. 76).

6.2.5 Installing the stand feet

6.2.5.1 Installing the stand feet – System CG 55 x 40

Insert two stand feet (Item 8) into the stand profile with fixing holes facing inwards. They are bolted with Torx T30 6x20 (see Fig. 77 and Fig. 78).

NOTE
Note and follow the bolting instructions page 39!

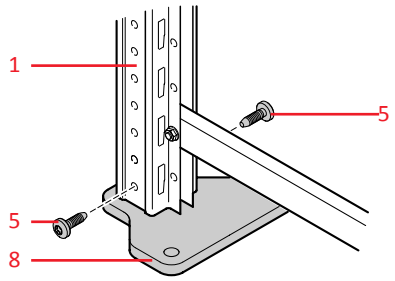

Z4148

1 Stand profile
5 Torx T 30 6 x 20
8 Stand foot

Fig. 77 Installing the stand foot for shelving system CG 55 x 40.

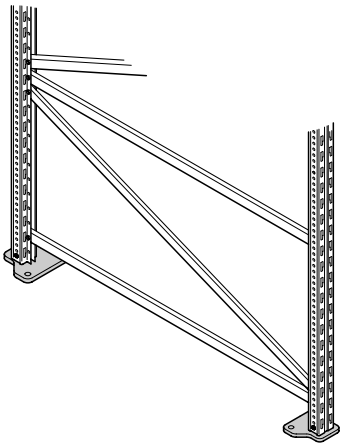

Z4167

Fig. 78 Stand feet for stand profile CG 55 x 40.

6.2.5.2 Installing the stand feet – System CG / CI 70 x 80

Insert two stand feet (Item 8) into the stand profile with fixing holes facing inwards. Insert one hexagon head bolt M 8 with spring washer Form B M 8 (DIN 127) in each stand foot, screw on nut M 8 by hand and screw tight (see Fig. 79 and Fig. 80).

NOTE
Note and follow the bolting instructions page 39!

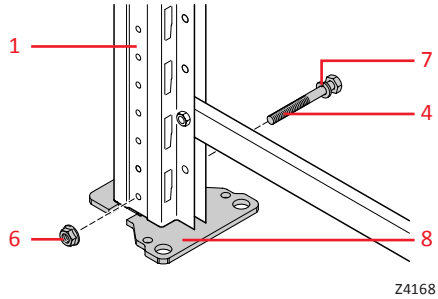

Z4168

1 Stand profile
4 Hexagon head bolt
6 Locking nut
7 Spring washer
8 Stand foot

Fig. 79 Installing the stand foot for shelving systems CG / CI 70 x 80.

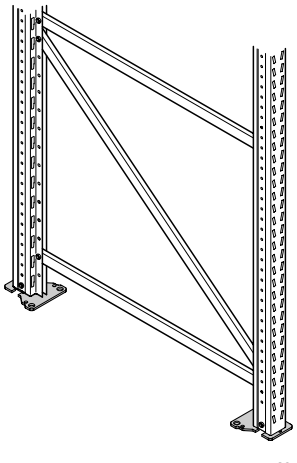

Z4169

Fig. 80 Stand feet for stand profile CG / CI 70 x 80.

6.2.5.3 Installing the stand feet – System CI 85 x 80 and CI 100 x 80

Insert two stand feet (Item 8) into the stand profile with fixing holes facing inwards. Insert two hexagon head bolts M8 with spring washer Form B M8 (DIN 127) in each stand foot, screw on nuts M8 by hand and screw tight (see Fig. 81 and Fig. 82).

NOTE
Note and follow the bolting instructions page 39!

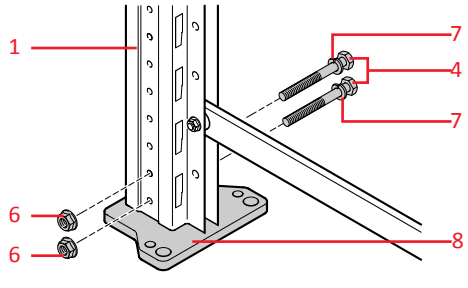

1 Stand profile
4 Hexagon head bolt
6 Locking nut
7 Spring washer
8 Stand foot

Fig. 81 Installing the stand foot for shelving systems CI 85 x 80 and CI 100 x 80.

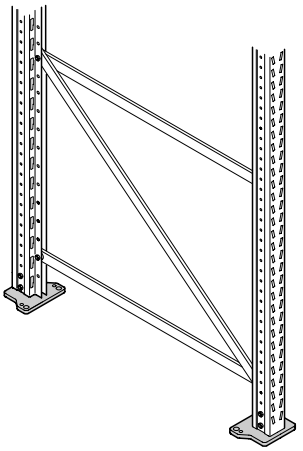

Fig. 82 Stand feet for stand profile CI 85 x 80 and CI 100 x 80.

6.3 Bolted stands parts list, System CG 55 x 40

6.3.1 System CG 55 x 40 – Standard range

Bolted stands, System CG 55 x 40 – Standard range									
Component parts (Qty) / Dimensions (H / T) cm		1		2		3		5	8
Item No.		Stand profile CG 55 x 40	Length (cm)	Diagonal strut	Length (cm)	Horizontal strut	Length (cm)	Torx T30 6 x 20	Stand foot
29 8021	220/60	2	218.7	3	74.8	5	49.4	20	2
29 8022	220/70	2	218.7	3	81.7	5	59.4	20	2
29 8023	220/80	2	218.7	3	89.1	5	69.4	20	2
29 8024	220/95	2	218.7	3	102.6	5	86.1	20	2
29 8026	220/115	2	218.7	3	119.8	5	106.1	20	2
29 8027	220/135	2	218.7	3	137.8	5	126.1	20	2
29 8028	220/155	2	218.7	3	156.3	5	146.1	20	2
29 8061	260/60	2	258.7	3	74.8	5	49.4	20	2
29 8062	260/70	2	258.7	3	81.7	5	59.4	20	2
29 8063	260/80	2	258.7	3	89.1	5	69.4	20	2
29 8064	260/95	2	258.7	3	102.6	5	86.1	20	2
29 8066	260/115	2	258.7	3	119.8	5	106.1	20	2
29 8067	260/135	2	258.7	3	137.8	5	126.1	20	2
29 8068	260/155	2	258.7	3	156.3	5	146.1	20	2
29 8101	300/60	2	298.7	4	74.8	6	49.4	24	2
29 8102	300/70	2	298.7	4	81.7	6	59.4	24	2
29 8103	300/80	2	298.7	4	89.1	6	69.4	24	2
29 8104	300/95	2	298.7	4	102.6	6	86.1	24	2
29 8106	300/115	2	298.7	4	119.8	6	106.1	24	2
29 8107	300/135	2	298.7	4	137.8	6	126.1	24	2
29 8108	300/155	2	298.7	4	156.3	6	146.1	24	2
29 8141	340/60	2	338.7	5	74.8	6	49.4	26	2
29 8142	340/70	2	338.7	5	81.7	6	59.4	26	2
29 8143	340/80	2	338.7	5	89.1	6	69.4	26	2
29 8144	340/95	2	338.7	5	102.6	6	86.1	26	2
29 8146	340/115	2	338.7	5	119.8	6	106.1	26	2
29 8147	340/135	2	338.7	5	137.8	6	126.1	26	2
29 8148	340/155	2	338.7	5	156.3	6	146.1	26	2

Tab. 16 Bolted stands parts list, System CG 55 x 40 – Standard range (dimensions in cm).

6.3.2 System CG 55 x 40 – Special range

Bolted stands, System CG 55 x 40 – Special range									
Component parts (Qty) / Dimensions (H / T) cm / Item No.		1		2		3		5	8
Item No.	Dimensions (H / T) cm	Stand profile CG 55 x 40	Length (cm)	Diagonal strut	Length (cm)	Horizontal strut	Length (cm)	Torx T 30 6 x 20	Stand foot
298153	350/80	2	348.7	5	89.1	7	69.4	28	2
298156	350/115	2	348.7	5	119.8	7	106.1	28	2
298170	400/80	2	398.7	5	89.1	7	69.4	28	2
298175	400/115	2	398.7	5	119.8	7	106.1	28	2
298171	450/80	2	448.7	6	89.1	8	69.4	32	2
298176	450/115	2	448.7	6	119.8	8	106.1	32	2
298172	500/80	2	498.7	7	89.1	9	69.4	36	2
298177	500/115	2	498.7	7	119.8	9	106.1	36	2
298173	550/80	2	548.7	8	89.1	10	69.4	40	2
298178	550/115	2	548.7	8	119.8	10	106.1	40	2
298174	600/80	2	598.7	9	89.1	10	69.4	42	2
298179	600/115	2	598.7	9	119.8	10	106.1	42	2

Tab. 17 Bolted stands parts list, System CG 55 x 40 – Special range (dimensions in cm).

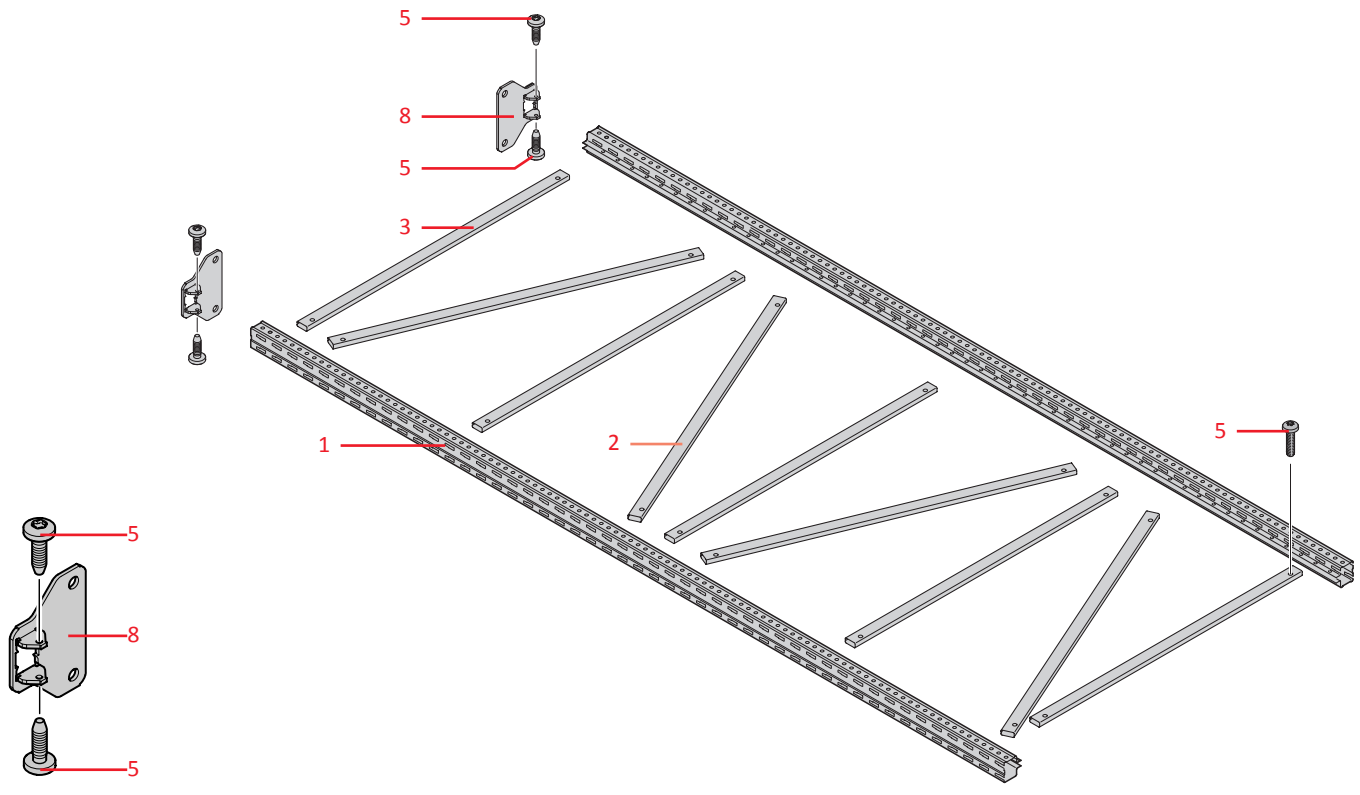

1 Stand profile
2 Strut, diagonal
3 Strut, horizontal
5 Torx T 30 6 x 20
8 Stand foot

Fig. 83 Bolted stands components overview, System CG 55 x 40.

6.4 Bolted stands parts list, System CG 70 x 80

6.4.1 System CG 70 x 80 – Standard range

Bolted stands, System CG 70 x 80 – Standard range												
Component parts (Qty) / Dimensions / Item No.	(H / T) cm	1		2		3		4	5	6	7	8
		Stand profile CG 70 x 80	Length (cm)	Diagonal strut	Length (cm)	Horizontal strut	Length (cm)	Hexagon head bolt M 8 x 75 8.8 (DIN 931 / ISO 4014)	Hexagon head bolt M 8 x 30	Locking nut M 8	Spring washer Form B-M 8 (DIN 127)	Stand foot
29 8206	220/85	2	218.7	2	116.2	3	71.0	2	10	12	2	2
29 8207	220/105	2	218.7	2	129.2	3	91.0	2	10	12	2	2
29 8208	220/115	2	218.7	2	136.3	3	101.0	2	10	12	2	2
29 8226	280/85	2	278.7	2	116.2	4	71.0	2	12	14	2	2
29 8227	280/105	2	278.7	2	129.2	4	91.0	2	12	14	2	2
29 8228	280/115	2	278.7	2	136.3	4	101.0	2	12	14	2	2
29 8253	360/85	2	358.7	3	116.2	5	71.0	2	16	18	2	2
29 8254	360/105	2	358.7	3	129.2	5	91.0	2	16	18	2	2
29 8255	360/115	2	358.7	3	136.3	5	101.0	2	16	18	2	2
29 8280	440/85	2	438.7	4	116.2	6	71.0	2	20	22	2	2
29 8281	440/105	2	438.7	4	129.2	6	91.0	2	20	22	2	2
29 8282	440/115	2	438.7	4	136.3	6	101.0	2	20	22	2	2
29 8303	510/85	2	508.7	4	116.2	6	71.0	2	20	22	2	2
29 8304	510/105	2	508.7	4	129.2	6	91.0	2	20	22	2	2
29 8305	510/115	2	508.7	4	136.3	6	101.0	2	20	22	2	2

Tab. 18 Bolted stands parts list, System CG 70 x 80 – Standard range (dimensions in cm).

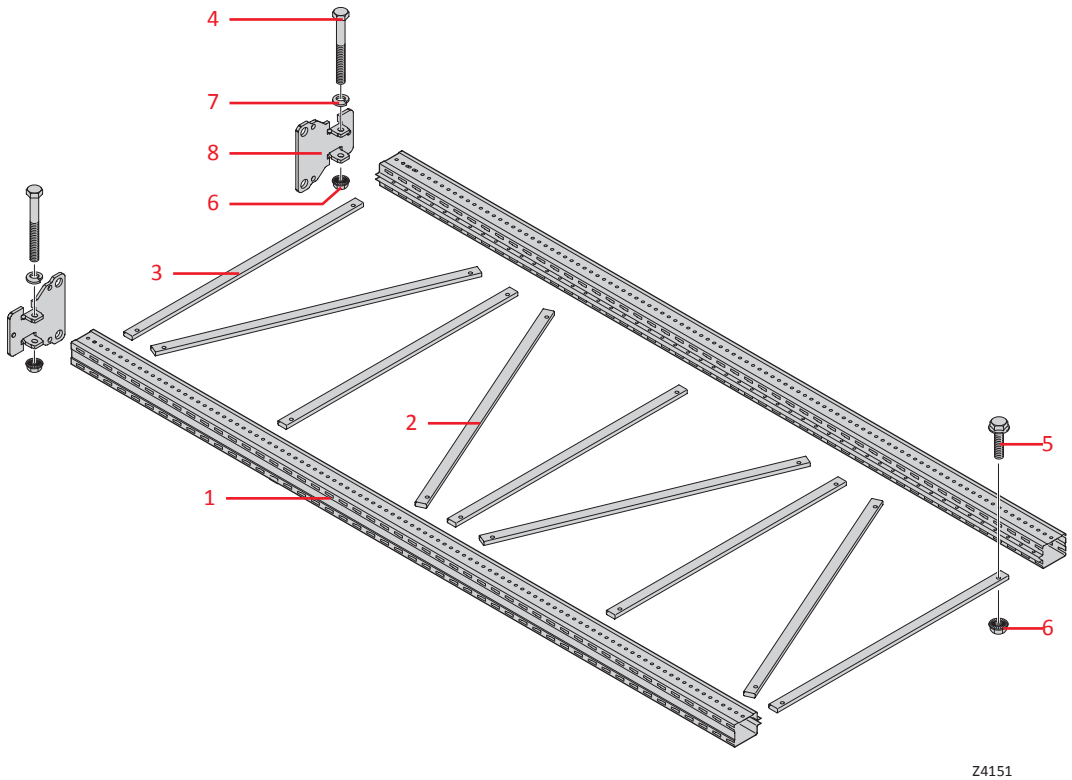

Fig. 84 Bolted stands components overview, System CG 70 x 80.

6.4.2 System CG 70 x 80 – Special range

Bolted stands, System CG 70 x 80 – Special range												
Component parts (Qty) / Dimensions (H / T) cm / Item No.		1		2		3		4	5	6	7	8
		Stand profile CG 70 x 80	Length (cm)	Diagonal strut	Length (cm)	Horizontal strut	Length (cm)	Hexagon head bolt M8 x 75 8.8 (DIN 931 / ISO 4014)	Hexagon head bolt M8 x 30	Locking nut M8	Spring washer Form B-M 8 (DIN 127)	Stand foot
29 8342	170/105	2	168.7	1	129.2	3	91.0	2	8	10	2	2
29 8341	210/40	2	208.7	1	96.7	3	26.0	2	8	10	2	2
29 8340	250/60	2	248.7	2	103.3	4	46.0	2	12	14	2	2
29 8218	250/115	2	248.7	2	136.3	4	101.0	2	12	14	2	2
29 8330	300/80	2	298.7	2	113.3	4	66.0	2	12	14	2	2
29 8235	300/115	2	298.7	2	136.3	4	101.0	2	12	14	2	2
29 8331	350/80	2	348.7	3	113.3	5	66.0	2	16	18	2	2
29 8252	350/115	2	348.7	3	136.3	5	101.0	2	16	18	2	2
29 8332	400/80	2	398.7	3	113.3	5	66.0	2	16	18	2	2
29 8268	400/115	2	398.7	3	136.3	5	101.0	2	16	18	2	2
29 8283	450/85	2	448.7	4	116.2	6	71.0	2	20	22	2	2
29 8333	450/80	2	448.7	4	113.3	6	66.0	2	20	22	2	2
29 8284	450/105	2	448.7	4	129.2	6	91.0	2	20	22	2	2
29 8285	450/115	2	448.7	4	136.3	6	101.0	2	20	22	2	2
29 8334	500/80	2	498.7	4	113.3	6	66.0	2	20	22	2	2
29 8302	500/115	2	498.7	4	136.3	6	101.0	2	20	22	2	2
29 8314	550/40	2	548.7	5	96.7	7	26.0	2	24	26	2	2
29 8313	550/60	2	548.7	5	103.3	7	46.0	2	24	26	2	2
29 8335	550/80	2	548.7	5	113.3	7	66.0	2	24	26	2	2
29 8312	550/85	2	548.7	5	116.2	7	71.0	2	24	26	2	2
29 8311	550/105	2	548.7	5	129.2	7	91.0	2	24	26	2	2
29 8310	550/115	2	548.7	5	136.3	7	101.0	2	24	26	2	2
29 8336	600/80	2	598.7	5	113.3	7	66.0	2	24	26	2	2
29 8320	600/115	2	598.7	5	136.3	7	101.0	2	24	26	2	2

Tab. 19 Bolted stands parts list, System CG 70 x 80 – Special range (dimensions in cm).

6.5 Bolted stands parts list, System CI 70 x 80

6.5.1 System CI 70 x 80 – Standard range

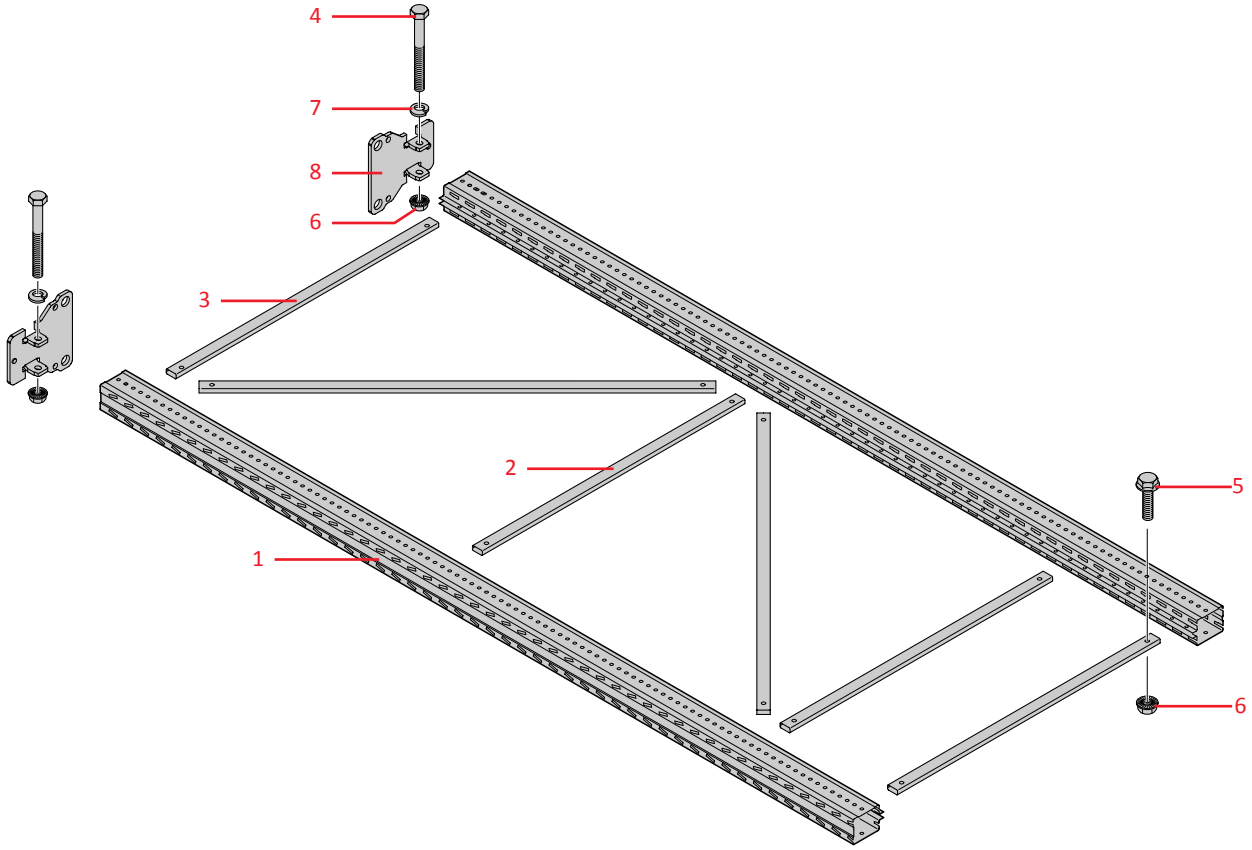

1	Stand profile	4	Hexagon head bolt M 8 x 75 8.8 (DIN 931 / ISO 4014)	6	Locking nut M 8
2	Strut, diagonal			7	Spring washer Form B-M 8 (DIN 127)
3	Strut, horizontal	5	Hexagon head bolt M 8 x 45 8.8 (DIN 931 / ISO 4014)	8	Stand foot

Fig. 85 Bolted stands components overview, System CI 70x 80.

Assembly Instructions for the Bolted Stands

Bolted stands, System CG 70 x 80 – Standard range												
Component parts (Qty) / Dimensions (H / T) cm	Item No.	1		2		3		4	5	6	7	8
		Stand profile CI 70 x 80	Length (cm)	Diagonal strut	Length (cm)	Horizontal strut	Length (cm)	Hexagon head bolt M 8 x 75 8.8 (DIN 931 / ISO 4014)	Hexagon head bolt M 8 x 30 8.8 (DIN 931 / ISO 4014)	Locking nut M 8	Spring washer Form B-M 8 (DIN 127)	Stand foot
400/80	29 1120	2	398.7	3	113.3	5	66.0	2	16	18	2	2
400/110	29 1722	2	398.7	3	132.7	5	96.0	2	16	18	2	2
450/80	29 1125	2	448.7	4	113.3	6	66.0	2	20	22	2	2
450/110	29 1723	2	448.7	4	132.7	6	96.0	2	20	22	2	2
500/80	29 1130	2	498.7	4	113.3	6	66.0	2	20	22	2	2
500/110	29 1742	2	498.7	4	132.7	6	96.0	2	20	22	2	2
550/80	29 1135	2	548.7	5	113.3	7	66.0	2	24	26	2	2
550/110	29 1725	2	548.7	5	132.7	7	96.0	2	24	26	2	2
600/80	29 1140	2	598.7	5	113.3	7	66.0	2	24	26	2	2
600/110	29 1726	2	598.7	5	132.7	7	96.0	2	24	26	2	2
650/80	29 1145	2	648.7	6	113.3	8	66.0	2	28	30	2	2
650/110	29 1727	2	648.7	6	132.7	8	96.0	2	28	30	2	2
700/80	29 1150	2	698.7	6	113.3	8	66.0	2	28	30	2	2
700/110	29 1728	2	698.7	6	132.7	8	96.0	2	28	30	2	2
750/80	29 1155	2	748.7	7	113.3	9	66.0	2	32	34	2	2
750/110	29 1729	2	748.7	7	132.7	9	96.0	2	32	34	2	2
800/80	29 1160	2	798.7	7	113.3	9	66.0	2	32	34	2	2
800/110	29 1730	2	798.7	7	132.7	9	96.0	2	32	34	2	2
850/80	29 1165	2	848.7	8	113.3	10	66.0	2	36	38	2	2
850/110	29 1731	2	848.7	8	132.7	10	96.0	2	36	38	2	2
900/80	29 1170	2	898.7	8	113.3	10	66.0	2	36	38	2	2
900/110	29 1732	2	898.7	8	132.7	10	96.0	2	36	38	2	2
950/80	29 1175	2	948.7	9	113.3	11	66.0	2	40	42	2	2
950/110	29 1733	2	948.7	9	132.7	11	96.0	2	40	42	2	2

Tab. 20 Bolted stands parts list, System CI 70 x 80 – Standard range (dimensions in cm).

6.6 Bolted stands parts list, System CI 85 x 80

6.6.1 System CI 85 x 80 – Standard range

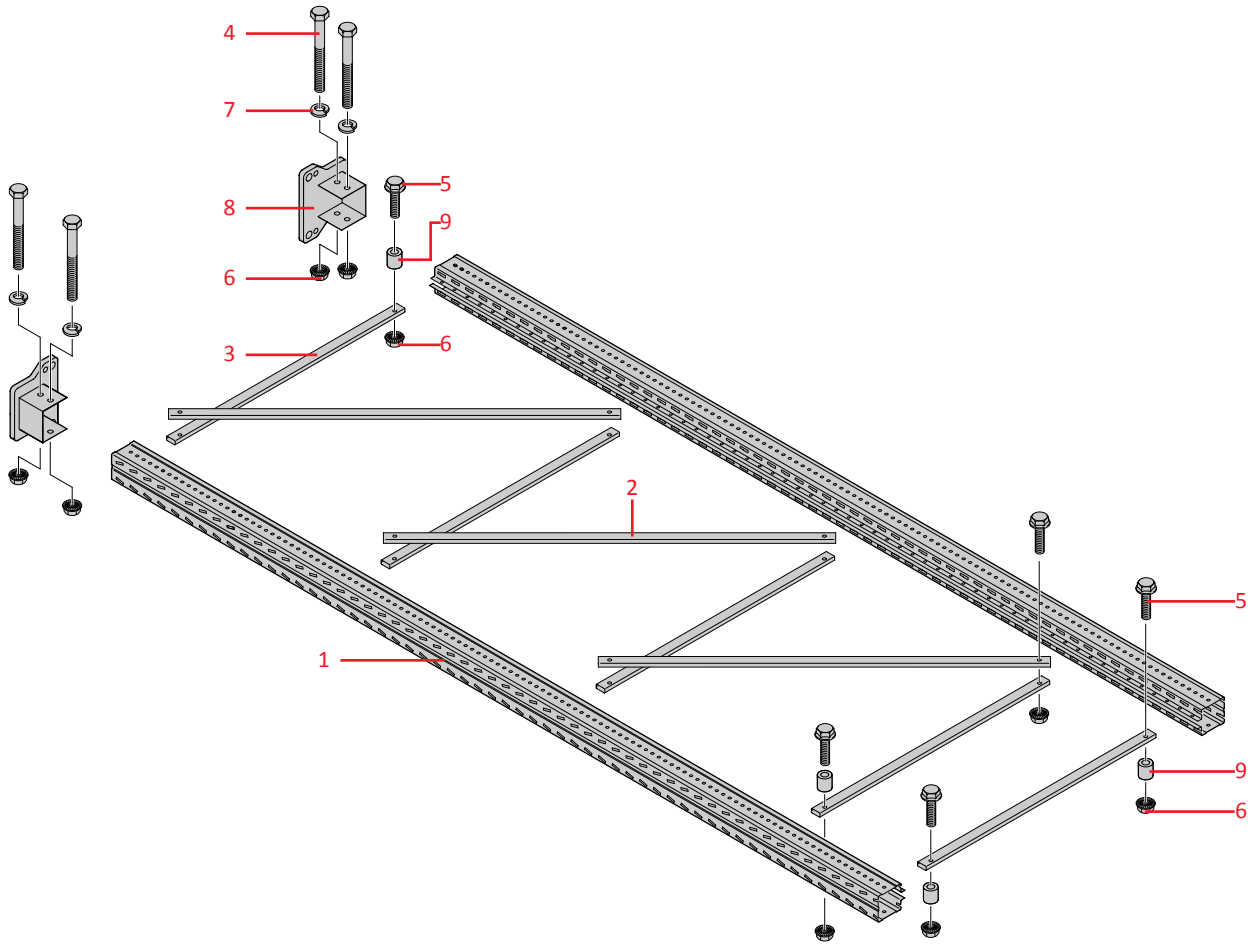

1 Stand profile
2 Strut, diagonal
3 Strut, horizontal
4 Hexagon head bolt M 8 x 90 8.8 (DIN 931 / ISO 4014)
5 Hexagon head bolt M 8 x 45 8.8 (DIN 931 / ISO 4014)
6 Locking nut M 8
7 Spring washer Form B-M 8 (DIN 127)
8 Stand foot
9 Spacer

Fig. 86 Bolted stands components overview, System CI 85 x 80.

Assembly Instructions for the Bolted Stands

Bolted stands, System CI 85 x 80 – Standard range													
Component parts (Qty) / Dimensions (H / T) cm / Item No.		1		2		3		4	5	6	7	8	9
		Stand profile CI 85x80	Length (cm)	Diagonal strut	Length (cm)	Horizontal strut	Length (cm)	Hexagon head bolt M8 x 90 8.8 (DIN 931 / ISO 4014)	Hexagon head bolt M8 x 45 8.8 (DIN 931 / ISO 4014)	Locking nut M8	Spring washer Form B-M8 (DIN 127)	Stand foot	Spacer
29 8660	400/80	2	398.7	4	113.3	6	66.0	4	12	16	4	2	4
29 8770	400/110	2	398.7	4	132.7	6	96.0	4	12	16	4	2	4
29 8661	450/80	2	448.7	4	113.3	6	66.0	4	12	16	4	2	4
29 8771	450/110	2	448.7	4	132.7	6	96.0	4	12	16	4	2	4
29 8662	500/80	2	498.7	5	113.3	7	66.0	4	14	18	4	2	4
29 8772	500/110	2	498.7	5	132.7	7	96.0	4	14	18	4	2	4
29 8663	550/80	2	548.7	5	113.3	7	66.0	4	14	18	4	2	4
29 8773	550/110	2	548.7	5	132.7	7	96.0	4	14	18	4	2	4
29 8664	600/80	2	598.7	6	113.3	8	66.0	4	16	20	4	2	4
29 8774	600/110	2	598.7	6	132.7	8	96.0	4	16	20	4	2	4
29 8665	650/80	2	648.7	7	113.3	8	66.0	4	16	20	4	2	4
29 8775	650/110	2	648.7	7	132.7	8	96.0	4	16	20	4	2	4
29 8666	700/80	2	698.7	7	113.3	9	66.0	4	18	22	4	2	4
29 8776	700/110	2	698.7	7	132.7	9	96.0	4	18	22	4	2	4
29 8667	750/80	2	748.7	8	113.3	10	66.0	4	20	24	4	2	4
29 8777	750/110	2	748.7	8	132.7	10	96.0	4	20	24	4	2	4
29 8668	800/80	2	798.7	8	113.3	10	66.0	4	20	24	4	2	4
29 8778	800/110	2	798.7	8	132.7	10	96.0	4	20	24	4	2	4
29 8669	850/80	2	848.7	9	113.3	11	66.0	4	22	26	4	2	4
29 8779	850/110	2	848.7	9	132.7	11	96.0	4	22	26	4	2	4
29 8670	900/80	2	898.7	9	113.3	11	66.0	4	22	26	4	2	4
29 8780	900/110	2	898.7	9	132.7	11	96.0	4	22	26	4	2	4
29 8671	950/80	2	948.7	10	113.3	12	66.0	4	24	28	4	2	4
29 8781	950/110	2	948.7	10	132.7	12	96.0	4	24	28	4	2	4

Tab. 21 Bolted stands parts list, System CI 85 x 80 – Standard range (dimensions in cm).

6.7 Bolted stands parts list, System CI 100 x 80

6.7.1 System CI 100 x 80 – Standard range

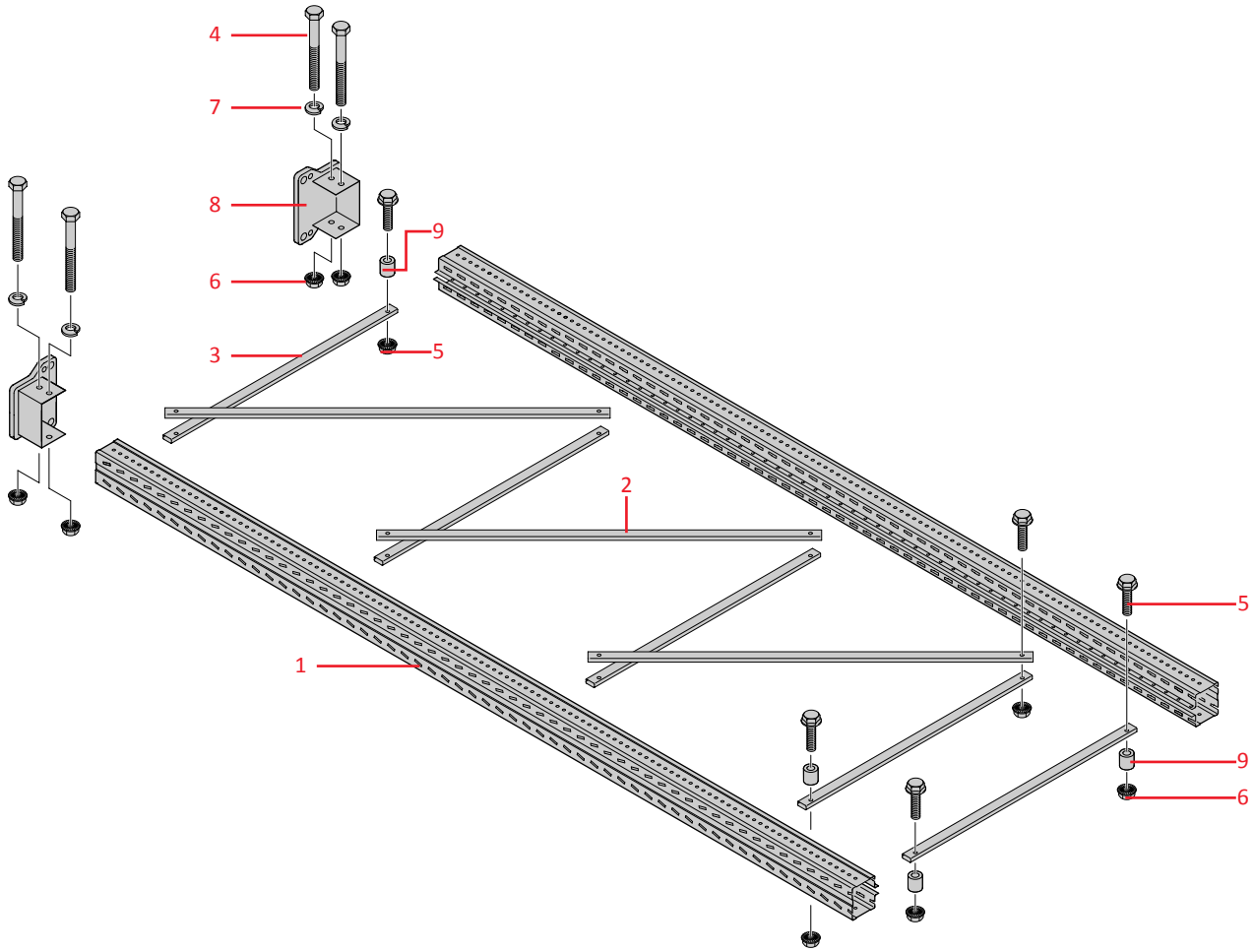

1 Stand profile
2 Strut, diagonal
3 Strut, horizontal
4 Hexagon head bolt M 8 x 110 8.8 (DIN 931 / ISO 4014)
5 Hexagon head bolt M 8 x 45 8.8 (DIN 931 / ISO 4014)
6 Locking nut M 8
7 Spring washer Form B-M 8 (DIN 127)
8 Stand foot
9 Spacer

Fig. 87 Bolted stands components overview, System CI 100 x 80.

Assembly Instructions for the Bolted Stands

Bolted stands, System CI 100 x 80 – Standard range													
Component parts (Qty) / Dimensions		1		2		3		4	5	6	7	8	9
Item No.	(H / T) cm	Stand profile CI 100 x 80	Length (cm)	Diagonal strut	Length (cm)	Horizontal strut	Length (cm)	Hexagon head bolt M 8 x 110 8.8 (DIN 931 / ISO 4014)	Hexagon head bolt M 8 x 45 8.8 (DIN 931 / ISO 4014)	Locking nut M 8	Spring washer Form B-M 8 (DIN 127)	Stand foot	Spacer
29 8680	400/80	2	398.7	4	113.3	6	66.0	4	12	16	4	2	4
29 8750	400/110	2	398.7	4	132.7	6	96.0	4	12	16	4	2	4
29 8681	450/80	2	448.7	4	113.3	6	66.0	4	12	16	4	2	4
29 8751	450/110	2	448.7	4	132.7	6	96.0	4	12	16	4	2	4
29 8682	500/80	2	498.7	5	113.3	7	66.0	4	14	18	4	2	4
29 8752	500/110	2	498.7	5	132.7	7	96.0	4	14	18	4	2	4
29 8683	550/80	2	548.7	5	113.3	7	66.0	4	14	18	4	2	4
29 8753	550/110	2	548.7	5	132.7	7	96.0	4	14	18	4	2	4
29 8684	600/80	2	598.7	6	113.3	8	66.0	4	16	20	4	2	4
29 8754	600/110	2	598.7	6	132.7	8	96.0	4	16	20	4	2	4
29 8685	650/80	2	648.7	7	113.3	8	66.0	4	16	20	4	2	4
29 8755	650/110	2	648.7	7	132.7	8	96.0	4	16	20	4	2	4
29 8686	700/80	2	698.7	7	113.3	9	66.0	4	18	22	4	2	4
29 8756	700/110	2	698.7	7	132.7	9	96.0	4	18	22	4	2	4
29 8687	750/80	2	748.7	8	113.3	10	66.0	4	20	24	4	2	4
29 8757	750/110	2	748.7	8	132.7	10	96.0	4	20	24	4	2	4
29 8688	800/80	2	798.7	8	113.3	10	66.0	4	20	24	4	2	4
29 8758	800/110	2	798.7	8	132.7	10	96.0	4	20	24	4	2	4
29 8689	850/80	2	848.7	9	113.3	11	66.0	4	22	26	4	2	4
29 8759	850/110	2	848.7	9	132.7	11	96.0	4	22	26	4	2	4
29 8690	900/80	2	898.7	9	113.3	11	66.0	4	22	26	4	2	4
29 8760	900/110	2	898.7	9	132.7	11	96.0	4	22	26	4	2	4
29 8691	950/80	2	948.7	10	113.3	12	66.0	4	24	28	4	2	4
29 8761	950/110	2	948.7	10	132.7	12	96.0	4	24	28	4	2	4

Tab. 22 Bolted stands parts list, System CI 100 x 80 – Standard range (dimensions in cm).

MPA NRW.

Materialprüfungsamt Nordrhein-Westfalen

Prüfen · Überwachen · Zertifizieren

GS-Zertifikat

Nach § 21 des Produktsicherheitsgesetzes (ProdSG)

Nr. MPA-NRW-GS-12-7833-1

(Version: 01)

Zertifizierungsstelle

Materialprüfungsamt Nordrhein-Westfalen
ZLS-Reg.-Nr.: ZLS-GS-45/13

Hersteller und Inhaber des Zertifikates

Tegometall International Sales GmbH

Industriestr. 7
CH-8574 Lengwil-Oberhofen / Schweiz

Produkt(e) (Gegenstand des Zertifikates)

Palettenregale

mit der Bezeichnung: CG 55 x 40, CG 70 x 80, CI 70 x 80, CI 85 x 80, CI 100 x 80 und CI 120 x 80

Ausführung und Verwendung entsprechend der beim MPA NRW hinterlegten technischen Dokumentation.

Die Produkte, die Gegenstand dieses Zertifikates sind, entsprechen den Anforderungen des Produktsicherheitsgesetz - ProdSG - vom 08.11.2011.

Grundlage für die technische Beurteilung und Zertifizierung sind die für diese Produkte relevanten Teile der BGR 234, Fassung 09/2006, sowie die hierin aufgeführten mitgeltenden technischen Regeln.

Interner Prüfbericht-Nr. **12 7833 16-01**

Der Inhaber dieses Zertifikates ist berechtigt, für die Produkte, die Gegenstand dieses Zertifikates sind, das GS-Zeichen in der nachfolgend dargestellten Form zu verwenden.

MPA NRW GS geprüfte Sicherheit

Das GS-Zeichen darf nur mit Bezug zu den Produkten verwendet werden, die Gegenstand dieses Zertifikates sind.

Es gelten die Bestimmungen des GS-Vertrags Nr. 12 7833 11 vom 07.09.2011.

Das Zertifikat ist gültig bis **02.02.2019**.

Dortmund, 02.02.2016

2. Ausfertigung

Dipl.-Ing. Tenbusch
Leiter der Zertifizierungsstelle

Dieses Zertifikat umfasst 1 Seite .

Dies ist eine Zweitausfertigung. Rechtlich gültig ist ausschließlich die vom MPA NRW unterschriebene und gestempelte Fassung.
Materialprüfungsamt Nordrhein-Westfalen • Marsbruchstraße 186 • 44287 Dortmund • Telefon +49 (0)231 4502-0 • Telefax +49 (0)231 458549 •
MPA NRW Brandprüfzentrum Erwitte • Auf den Thränen 2 • 59597 Erwitte • Telefon +49 (0)2943 897-0 • Telefax +49 (0)2943 897-89 •
• E-Mail: info@mpanrw.de • www.mpanrw.de •

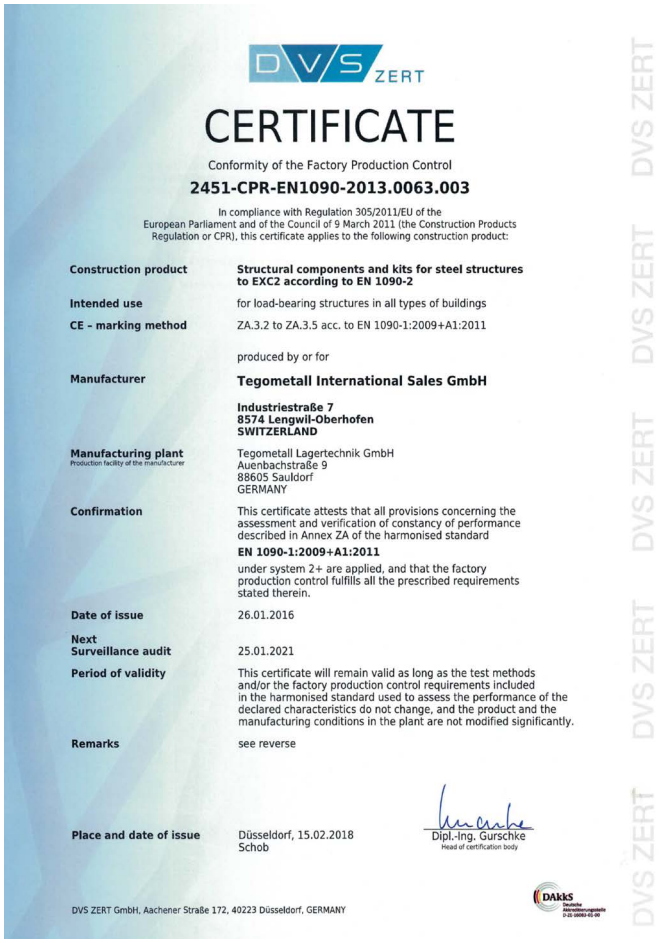

DVS ZERT

CERTIFICATE

Conformity of the Factory Production Control

2451-CPR-EN1090-2013.0063.003

In compliance with Regulation 305/2011/EU of the European Parliament and of the Council of 9 March 2011 (the Construction Products Regulation or CPR), this certificate applies to the following construction product:

Construction product	**Structural components and kits for steel structures to EXC2 according to EN 1090-2**
Intended use	for load-bearing structures in all types of buildings
CE - marking method	ZA.3.2 to ZA.3.5 acc. to EN 1090-1:2009+A1:2011
	produced by or for
Manufacturer	**Tegometall International Sales GmbH** **Industriestraße 7** **8574 Lengwil-Oberhofen** **SWITZERLAND**
Manufacturing plant Production facility of the manufacturer	Tegometall Lagertechnik GmbH Auenbachstraße 9 88605 Sauldorf GERMANY
Confirmation	This certificate attests that all provisions concerning the assessment and verification of constancy of performance described in Annex ZA of the harmonised standard **EN 1090-1:2009+A1:2011** under system 2+ are applied, and that the factory production control fulfills all the prescribed requirements stated therein.
Date of issue	26.01.2016
Next Surveillance audit	25.01.2021
Period of validity	This certificate will remain valid as long as the test methods and/or the factory production control requirements included in the harmonised standard used to assess the performance of the declared characteristics do not change, and the product and the manufacturing conditions in the plant are not modified significantly.
Remarks	see reverse
Place and date of issue	Düsseldorf, 15.02.2018 Schob

Dipl.-Ing. Gurschke
Head of certification body

DAkkS Deutsche Akkreditierungsstelle D-ZE-10065-01-00

DVS ZERT GmbH, Aachener Straße 172, 40223 Düsseldorf, GERMANY

Tegometall has very high quality and safety standards in every respect. We therefore have our processes, products and working methods checked and evaluated regularly by independent institutions. In this way our customers can be certain that we always work to the current and most recent standards. Contact us.

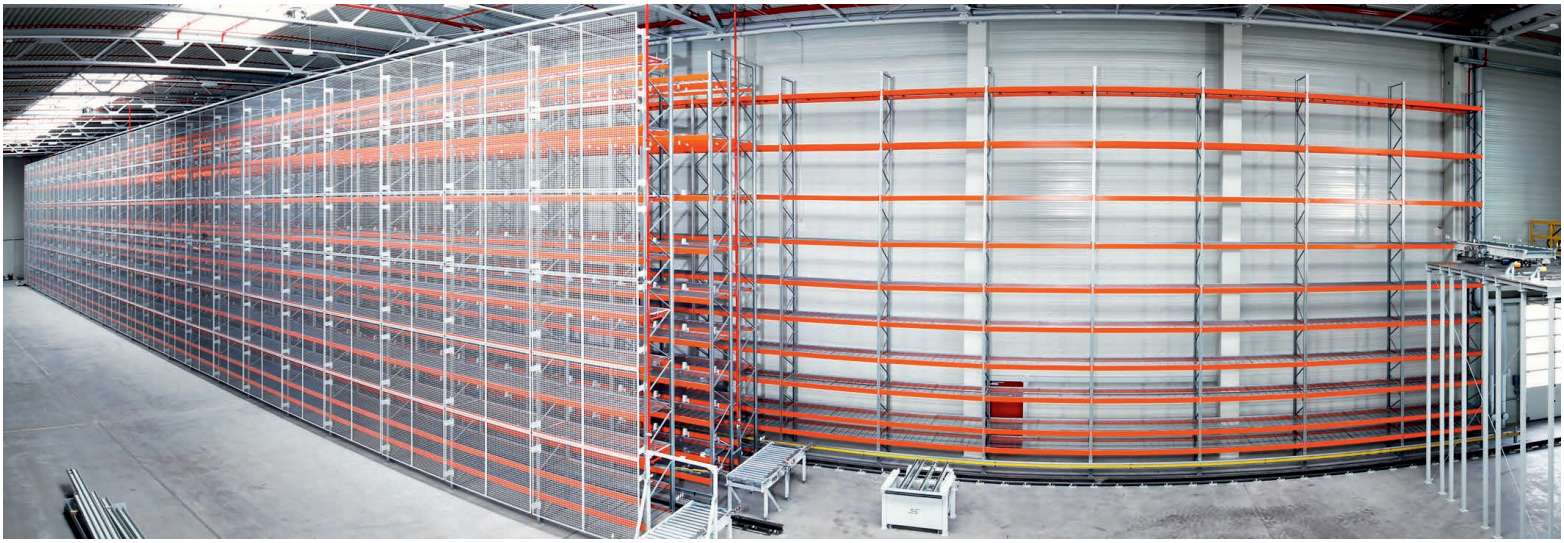

Tegometall
The Original for 50 years

Tegometall International Sales GmbH - Industriestrasse 7 - 8574 Lengwil / Switzerland - www.tegometall.com